Flat-band condition in MOS capacitor :-

- To achieve flat-band condition in a MOS capacitor, we have to remove negative charge in P-Si substrate under equilibrium. So, we apply negative voltage to metal gate w.r.t body.

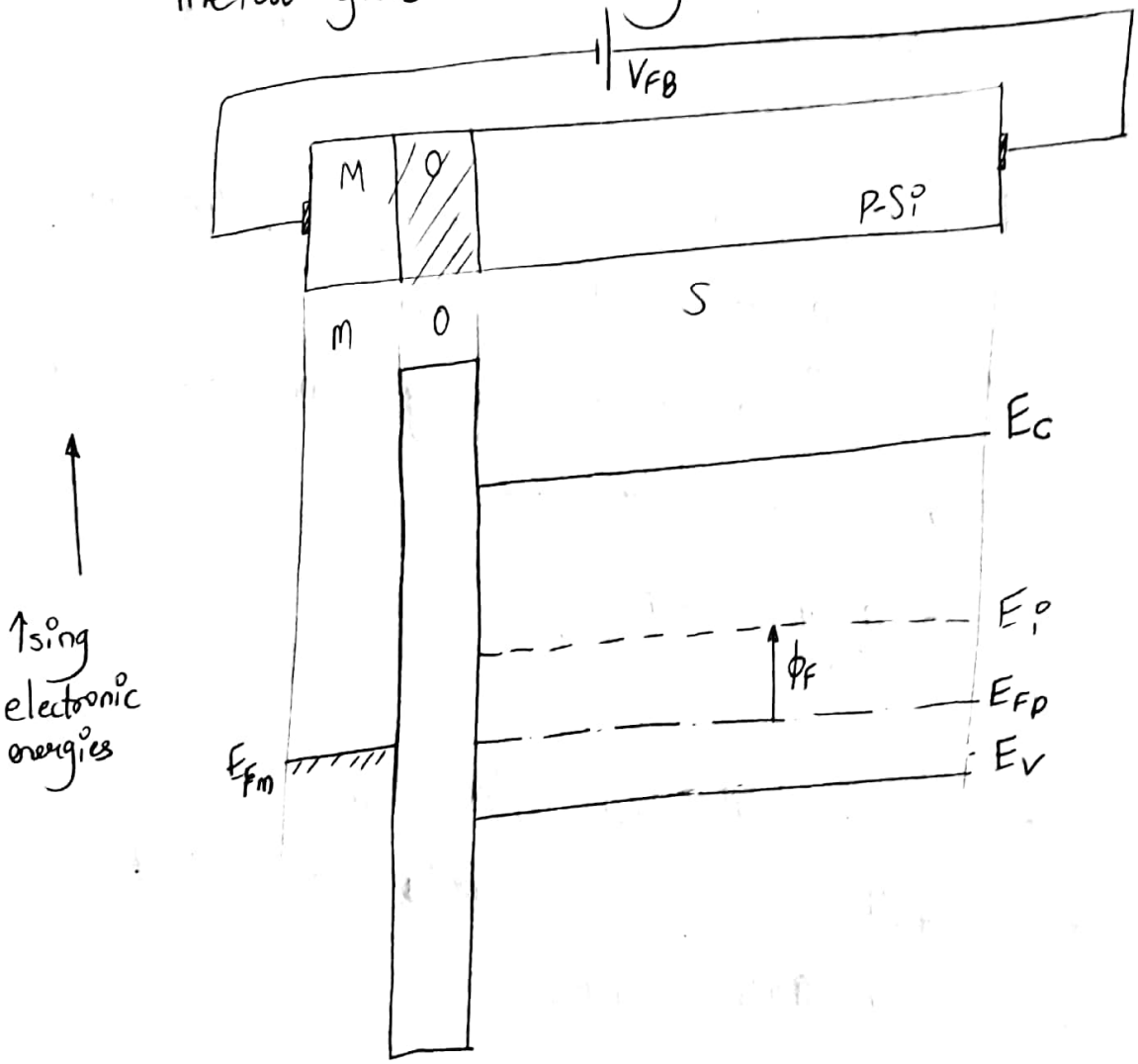

Note :- a) When a fermi-level moves up, it means you are applying a negative voltage.

b) Flat band means zero-charge condition in semiconductor

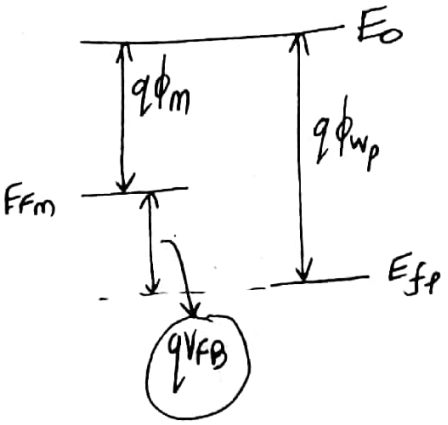

$$\boxed{V_{FB} = \phi_{ms} - \frac{Q_{ox}}{C_{ox}}}$$

contact

- As evident from EBD of isolated MOSCAP, a potential exist due to difference betn work function of metal & semiconductor.
- When a external voltage $\boxed{-V_{FB} = -(\phi_{wp} - \phi_m)}$ is applied to MOSCAP, it is in Flat-band condition
- Under Flat-band condition, all the energy bands are flat
- From above EBD, it is clear that

$$\boxed{qV_{FB} = -q(\phi_m - \phi_{wp})}$$

It means that Flat-band voltage equal to difference betn ϕ_m & ϕ_{wp} should be applied externally to a MOS capacitor.

- In Flat-band condition, the bands in the silicon (and oxide) are flat. As a consequences, there is no net charge in the semiconductor or on the metal and the electric field is zero everywhere.

⊢ Band bending in the MOS Capacitor :

- This section explores what happens when a voltage is applied to the gate of the MOS capacitor, and the different band bendings that result at the semiconductor surface.

Note:- Recall from semiconduct theory → Presence of an electric field E causes a bending of the bands, given by

$$\boxed{qE = \frac{dE_c}{dx} = \frac{dE_i}{dx} = \frac{dE_v}{dx}}$$

1. **Accumulation:-**

means pile up of majority carriers at the Si-SiO_2 interface

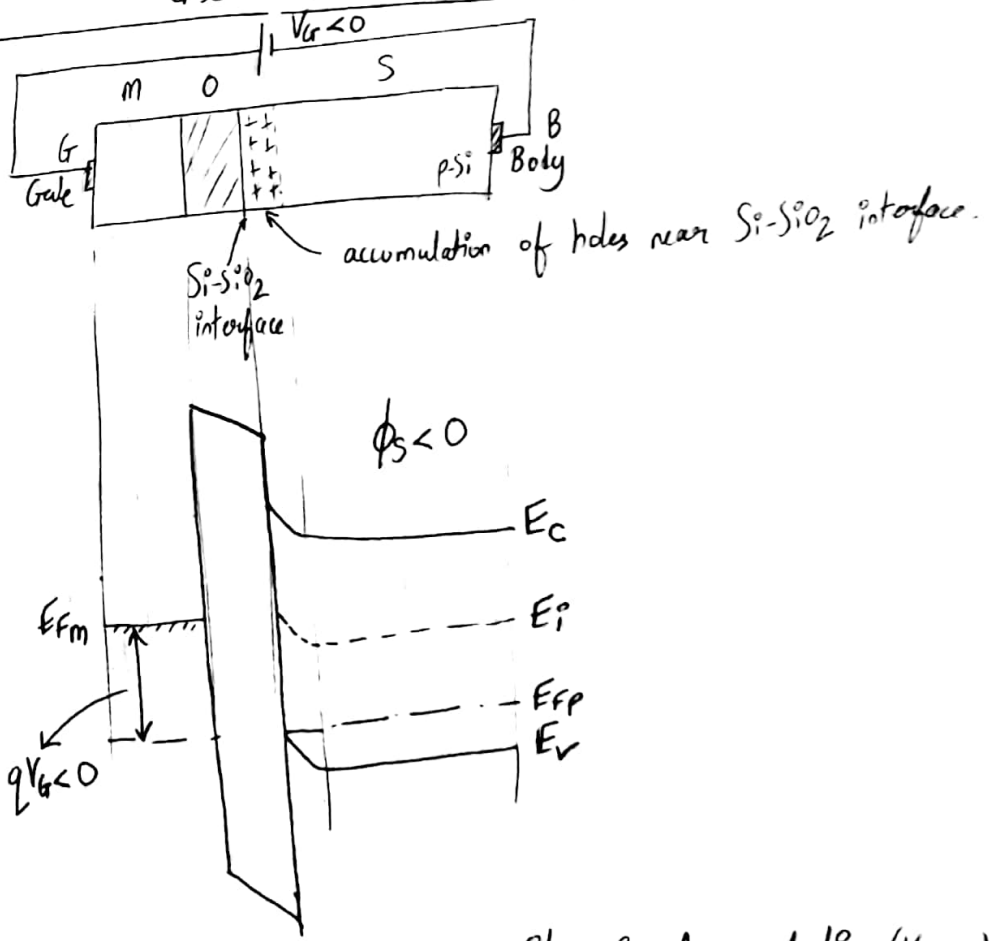

fig (a) EBD of MOS capacitor in Accumulation ($V_G<0$) cond n

- When the gate voltage applied is negative ($V_G < 0V$), majority carriers (holes) are attracted to the surface of the semiconductor from the bulk.
- The excess carriers produce a positively charged layer at the surface, which is matched by negative charge at the metal-oxide interface.
- There is an electric field in the oxide which penetrates slightly into the semiconductor, producing band-bending, as shown in fig(a).
- Note that the fermi-levels in the semiconductor and metal are separated by qV_G.
- This condition is called "accumulation", since it results in an accumulation of majority carriers at the $Si-SiO_2$ interface.

→ We now define the surface potential (ϕ_s) or (ψ_s)
This is the total amount of band bending at the surface of the semiconductor measured w.r.t bulk.

- The band bending can be measured on E_i, E_c or E_v.

- In this case, the bands bend upwards and ϕ_s (by definition) will be considered to be negative.
- For typical applied voltages in accumulation, ϕ_s is limited to -0.1 to -0.2 V.

2. <u>Depletion</u>: When the gate voltage applied is positive and not too large ($V_G > 0$V), the majority carriers are repelled away from the surface of p-Si producing a <u>depletion region</u>. (fig b)

means removal of majority carriers at the Si-SiO_2 interface.

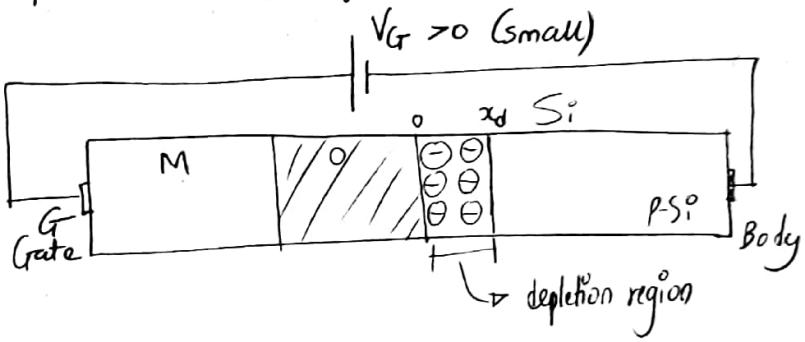

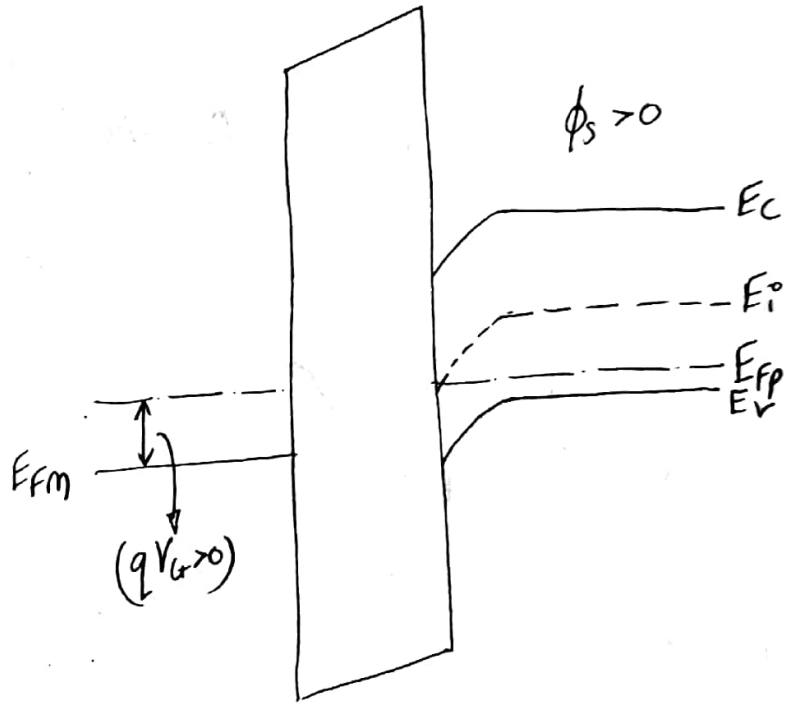

fig b: EBD of MOS Capacitor in depletion ($V_G > 0$ small)

- The depletion region contains a negative charge corresponding to the ionized immobile acceptors.
- The bands now bend downwards and ϕ_s is positive as evident in fig b.
- This condition is known as "Depletion".

3. Inversion :- Finally, when the gate voltage applied is positive and sufficiently large, the bands in the semiconductor bands as shown in fig c.

means pile-up of minority carriers so that they dominate the "bulk" majority carriers at the interface

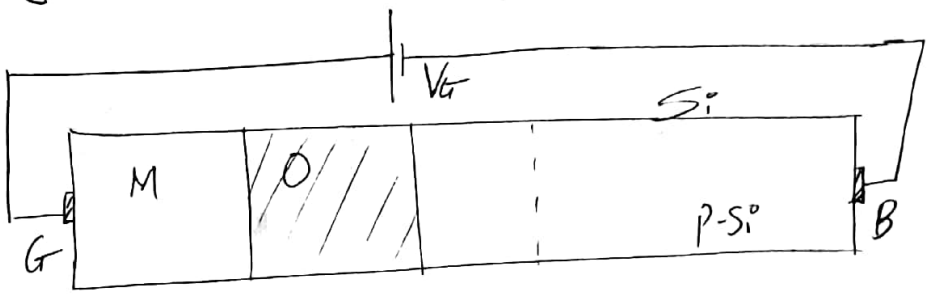

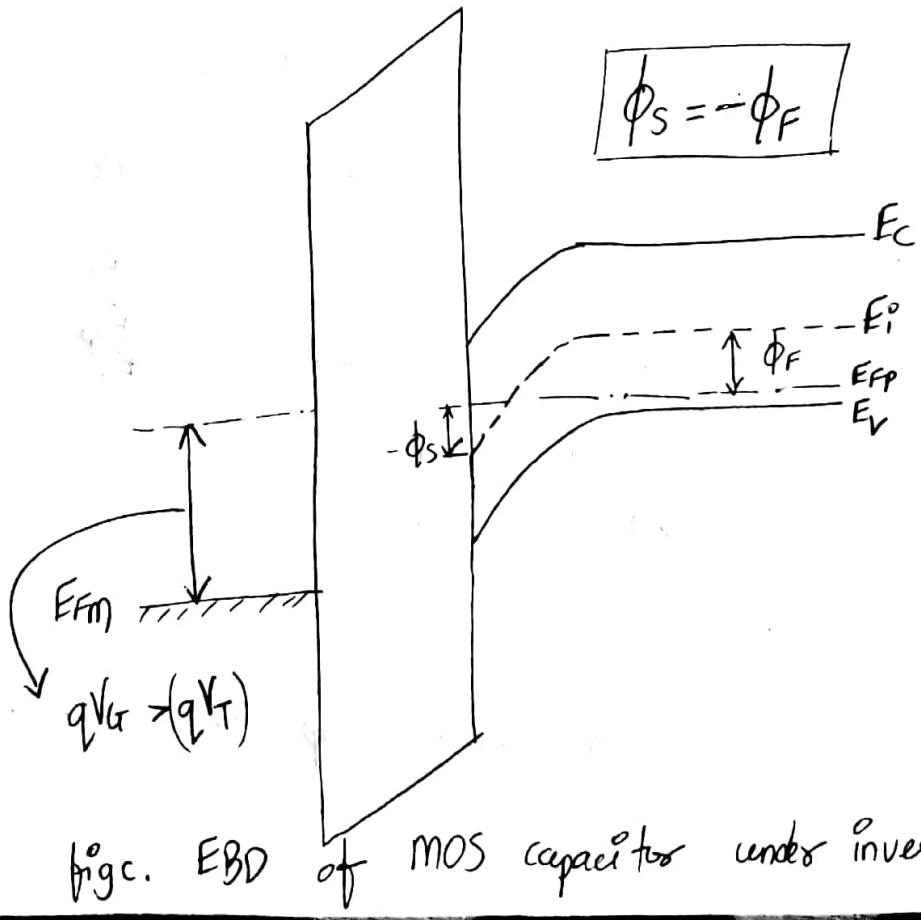

fig c. EBD of MOS capacitor under inversion

- In this case, the energy bands in the semiconductor bend enough that the <u>conduction band comes close</u> to the fermi level.
- This means that the surface of the semiconductor layer has effectively become n-type, and there are mobile minority carriers (electrons) present at the surface.
- This condition is known as "inversion", because the surface has been effectively <u>inverted</u> from p-type to <u>n-type</u>.
- [It is the carriers in the inversion layer which contributes to conduction in a MOS transistor.]
- A common definition of the <u>onset of inversion</u> is that the p-Si surface is as n-type as the bulk is p-type. $(n_s = P_B)$

  n_s → no of e's at surface; P_B → no of holes in bulk
- At inversion, $\boxed{\phi_S = -\phi_F}$ bulk & surface fermi potential are equal in magnitude but opposite in sign.
- In inversion, the negative charge in the inversion layer adds to the negative charge in the depletion region.