K. J. Somaiya College of Engineering, Mumbai-77
(Autonomous College Affiliated to University of Mumbai)
Semester: Jan 2020 – May 2020

Max. Marks: 30 | **Duration: 1hr.15 min.**
Class: T.Y B.Tech | **Semester: VI**
Branch: Electronics | **Course Code: UEXC 604**
Course Name: Basics of VLSI Design

Test 1

Use the following data wherever required
ni = 1.45×10^{10} /cm^3 $\varepsilon_{OX} = 3.97\varepsilon_O$ $\varepsilon_{Si} = 10^{-12}$ F/cm $\varepsilon_O = 8.854\times10^{-14}$ F/cm

Q. No	Questions	Marks
Q.1	Consider MOS capacitor with a p-type substrate: P-type Boron doping concentration N_A is 2×10^{16}/cm^3 Gate oxide thickness t_{OX} is 550×10^{-8} cm	
	i) Calculate the value of Gate oxide capacitance C_{OX} (in F/cm^2)	2
	ii) Draw energy band diagram for MOS capacitor under flat-band and inversion condition	02+02
	iii) Calculate maximum depletion region depth xd (in cm) in inversion condition	04
	OR	
Q.1	A PMOS transistor was fabricated on a n-type substrate with poly silicon gate: Substrate doping density of 10^{16} /cm^3 Gate doping density of 10^{20} /cm^3 Gate oxide thickness is 500×10^{-8} cm Number of fixed oxide charges are 2×10^{10} /cm^2 Calculate the threshold voltage (in Volt) for $V_{SB} = 0V$	10
Q.2	a) Consider a Device: N-channel Enhancement type MOSFET	
	i) Draw cross-sectional structure of the device (showing the channel condition) in linear(triode) mode and beyond saturation mode of operation	02
	ii) Write drain current expression for the device in linear(triode) mode (as per GCA) and saturation mode (including CLM effect). Also mention the conditions for operating modes validity	02
	iii) Find the magnitude of drain current for the device with following data: kn = 200 μA/V^2, $V_{T0} = 0.8V$, V_{DS}=3V and V_{GS}=4V	04
	b) i) Classify MOSFET capacitances	01
	ii) Calculate gate to drain overlap capacitance C_{GD} if C_{OX}= 100 nF/cm^2, W = 180 μm and L_D = 10μm	01
	OR	
Q.2	Mr Paul is planning to scale down a DEVICE X whose parameters are: W= 180 nm L= 90 nm $V_{DD} = 4V$ $I_{ON} = 1400$ μA $P_D = 500\mu W$ $t_{OX} = 25\times10^{-8}$ cm $N_A = 10^{15}$ /cm^3 What will the new values of above parameters when the DEVICE X is scaled down by using i) Constant Field scaling ii) Constant voltage scaling Scaling factor S to be considered as 1.4	10

Scanned with CamScanner

Q.3	A resistive load NMOS inverter have following parameters: $Kn' = 20\ \mu A/V^2$, $V_{T0} = 1V$, $W/L = 2$, $R_L = 200\ K\Omega$, $V_{DD} = 5V$	
	i) Draw resistive load NMOS inverter circuit	01
	ii) Calculate V_{OH}, V_{OL}, V_{IL} and V_{IH}	06
	iii) Calculate Noise Margins NM_L & NM_H	01
	iv) Draw VTC curve for the above circuit and mark the critical voltages (V_{OH}, V_{OL}, V_{IL} and V_{IH}) on it	02

Scanned with CamScanner

Q1. Given: $N_A = 2\times10^{16}/cm^3$

$t_{ox} = 550\times10^{-8}$ cm

Sol^n: i) $C_{ox} = \dfrac{\epsilon_{ox}}{t_{ox}} = \dfrac{3.97\times8.854\times10^{-14}}{550\times10^{-8}}$

$$\boxed{C_{ox} = 63.9 \ nF/cm^2}$$

ii) EBD for MOS Capacitor

a) Under Flat-band condition

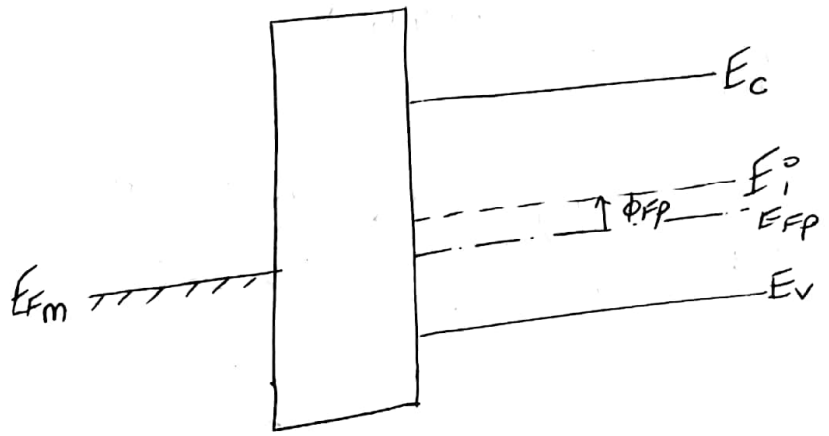

b) Under inversion condition

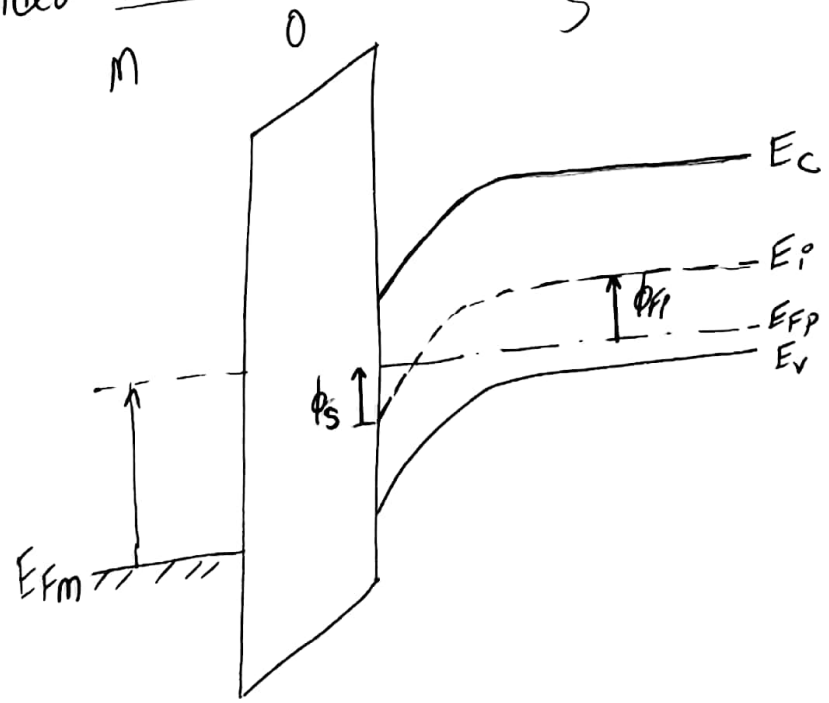

Scanned with CamScanner

iii) x_d :

x_d at inversion condition

$$x_d = \sqrt{\frac{2\epsilon_s |-2\phi_{Fp}|}{q N_A}}$$

$$\phi_{Fp} = \frac{KT}{q} \ln\left[\frac{n_i}{N_A}\right]$$

$$= 26\times10^{-3} \times \ln\left[\frac{1.45\times10^{10}}{2\times10^{16}}\right]$$

$$\phi_{Fp} = -0.3675\ V$$ --- (2m)

ie $$x_d = \sqrt{\frac{2\times10^{-12} \times |2\times(-0.3675)|}{1.6\times10^{-19} \times 2\times10^{16}}}$$

$$x_d = 21.43\times10^{-6}\ cm$$ --- (2m)

Scanned with CamScanner

Q1. PMOS transistor

$N_{D(sub)} = 10^{16}/cm^3$; $N_{D(polySi)} = 10^{20}/cm^3$

$t_{ox} = 500 \times 10^{-8}$ cm ; $N_{ox} = 2 \times 10^{10}/cm^2$

$V_{TO} = ?$

Solⁿ:- i) $\phi_{Fsub} = \frac{KT}{q} \ln\left[\frac{N_D}{n_i}\right] = 26 \times 10^{-3} \ln\left[\frac{10^{16}}{1.45 \times 10^{10}}\right]$ ---- (1m)

$\phi_{Fn} = 0.3495 V$

ii) $\phi_{F(gate)} = \frac{KT}{q} \ln\left[\frac{N_{D(polySi)}}{n_i}\right] = 26 \times 10^{-3} \times \ln\left[\frac{10^{20}}{1.45 \times 10^{10}}\right]$ ---- (1m)

$\phi_{F(gate)} = 0.589 V$

iii) $\phi_{ms} = \phi_{Fsub} - \phi_{F(gate)}$

$= 0.3495 - 0.589 = -0.2395$ ---- (1m)

iv) $Q_{BO} = +\sqrt{2q \epsilon_s N_D |-2\phi_{Fsub}|}$

$= \sqrt{2 \times 1.6 \times 10^{-19} \times 10^{-12} \times 10^{16} \times 2 \times 0.3495}$

$Q_{BO} = 47.294 \times 10^{-9}$ C/cm^2 ---- (2m)

Scanned with CamScanner

v) $Q_{ox} = q N_{ox}$

$= 1.6 \times 10^{-19} \times 2 \times 10^{10}$

$Q_{ox} = 3.2 \times 10^{-9}\ C/cm^2$ --- (1m)

vi) $C_{ox} = \dfrac{\epsilon_{ox}}{t_{ox}} = \dfrac{3.97 \times 8.854 \times 10^{-14}}{500 \times 10^{-8}}$

$C_{ox} = 70.3 \times 10^{-9}\ F/cm^2$ ---- (1m)

vii) $V_{TO} = \phi_{ms} - 2\phi_{Fsub} - \dfrac{Q_{BO}}{C_{ox}} - \dfrac{Q_{ox}}{C_{ox}}$

$= -0.2395 - 2 \times 0.3495 - \dfrac{47.294}{70.3} - \dfrac{3.2}{70.3}$

$= -0.2395 - 0.699 - 0.6727 - 0.0455$

$\boxed{V_{TO} = -1.6567\ Volts}$ ---- (3m)

Scanned with CamScanner

Q2 a)

i) Linear (triode) mode :

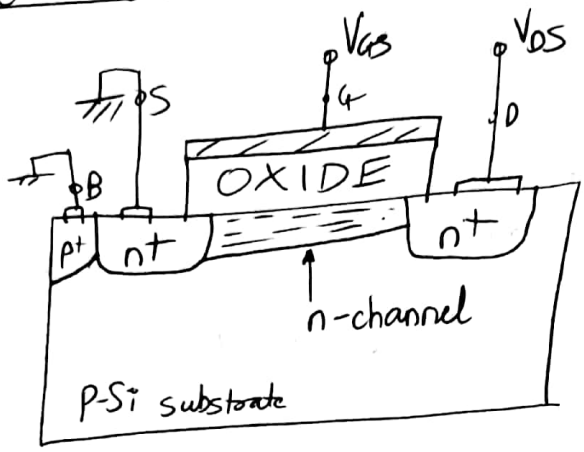

Beyond saturation mode :

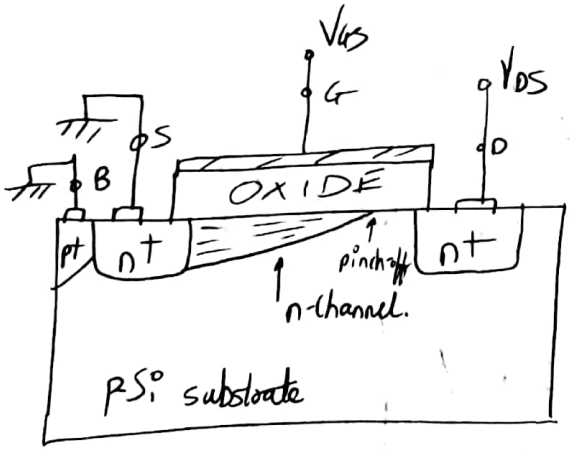

ii) $I_{D_{Linear}} = \frac{\mu_n C_{ox}}{2} \frac{W}{L} \left[2(V_{GS} - V_{TO}) V_{DS} - V_{DS}^2 \right]$

$I_{D_{Linear}} = \frac{K_n}{2} \left[2(V_{GS} - V_{TO}) V_{DS} - V_{DS}^2 \right]$;

$I_{Dsat} = \frac{K_n}{2} \left[V_{GS} - V_{TO} \right]^2 (1 + \lambda V_{DS})$;

Operating region validity

$V_{GS} \geq V_{TO}$ $V_{DS} < V_{GS} - V_{TO}$	As per GCA
$V_{GS} \geq V_{TO}$ $V_{DS} \geq V_{GS} - V_{TO}$	As per CLM

Scanned with CamScanner

iii) As $V_{GS} > V_{TO}$ ✓

$(4 > 0.8\ V)$

& $V_{DS} < V_{GS} - V_{TO}$ ✓

$\left(3 < \underset{(3.2)}{4 - 0.8}\right)$

Given device is in Linear mode

$$\therefore I_{D_{Lin}} = \frac{K_n}{2}\left[2(V_{GS} - V_{TO})V_{DS} - V_{DS}^2\right]$$

$$= \frac{200\times10^{-6}}{2}\left[2(4-0.8)3 - 3^2\right]$$

$$= 100\times10^{-6}\left[19.2 - 9\right]$$

$$\boxed{I_{D_{Lin}} = 1.02\ mA}$$

Scanned with CamScanner

Q2b)

i) MOSFET capacitance

- Gate oxide related capacitance
  - Gate overlap capacitance (F)
    - C_{GD}
    - C_{GS}
  - Gate parasitic capacitance (F)
    - C_{gd}
    - C_{gb}
    - C_{gs}
- Junction capacitances
  - Area capacitance (F/cm^2)
    - C_{dbj}
    - C_{sbj}
  - Side-wall capacitance (F/cm)
    - C_{swdj}
    - C_{swsj}

ii) $C_{GD} = ?$

$C_{ox} = 100\ nF/cm^2$, $W = 180\mu m$, $L_D = 10\mu m$

$$C_{GD} = 100\times10^{-9} \times W \times L_D$$

$$= 100\times10^{-9} \times 180\times10^{-4} \times 10\times10^{-4}$$

$$= 1.8\times10^{-12}\ F$$

$$\boxed{C_{GD} = 1.8\ pF}$$

Scanned with CamScanner

Q2. $S = 1.4$

	Before scaling	Const field scaling	Const voltage scaling
(1m) W	180nm	$\frac{W}{S} = \frac{180nm}{1.4} = \boxed{128.57\,nm}$	$\frac{W}{S} = \frac{180nm}{1.4} = \boxed{128.57nm}$
(1m) L	90nm	$\frac{L}{S} = \frac{90nm}{1.4} = \boxed{64.28nm}$	$\frac{L}{S} = \frac{90nm}{1.4} = \boxed{64.28nm}$
(1m) V_{DD}	4V	$\frac{V_{DD}}{S} = \frac{4V}{1.4}$ $\boxed{2.857V}$	V_{DD} $\boxed{4V}$
(2m) I_{ON}	1400μA	$\frac{I_{ON}}{S} = \frac{1400\mu A}{1.4}$ $\boxed{1000\mu A}$	$SI_{ON} = 1.4 \times 1400\mu A$ $\boxed{1960\mu A}$
(2m) P_D	500μW	$\frac{P_D}{S^2} = \frac{500\mu W}{1.4^2}$ $\boxed{255.1\mu W}$	$SP_D = 1.4 \times 500\mu W$ $\boxed{700\mu W}$
(1m) t_{ox}	25×10^{-8}cm	$\frac{t_{ox}}{S} = \frac{25 \times 10^{-8}cm}{1.4}$ $\boxed{17.85 \times 10^{-8}cm}$	$\frac{t_{ox}}{S} = \boxed{17.85 \times 10^{-8}cm}$
(2m) N_A	$10^{15}/cm^3$	$SN_A = \boxed{1.4 \times 10^{15}/cm^3}$	$S^2N_A = 1.4^2 \times 10^{15}/cm^3$ $\boxed{1.96 \times 10^{15}/cm^3}$

Scanned with CamScanner

Q3. Resistive load nMOS inverter

Given : $K_n' = 20\,\mu A/V^2$; $V_{TO} = 1V$; $\frac{W}{L} = 2$, $R_L = 200\,K\Omega$

$V_{DD} = 5V$

Sol^n: i)

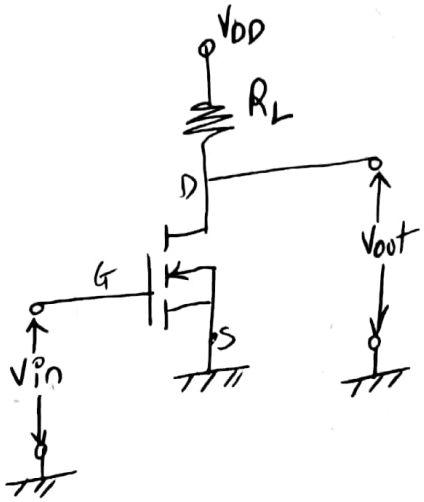

ii) K_nR_L :

$K_n = K_n'\left(\frac{W}{L}\right) = 20\times10^{-6}\times 2 = 40\,\mu A/V^2$

$K_nR_L = 40\times10^{-6}\times 200\times10^{3} = \underline{8\ V^{-1}}$

→ V_{OH} : ---- (1m)

$\boxed{V_{OH} = V_{DD} = 5V}$

→ V_{OL} :

$$V_{OL}^2 - 2\left[V_{DD} - V_{TO} + \frac{1}{K_nR_L}\right]V_{OL} + \frac{2V_{DD}}{K_nR_L} = 0$$

ie $V_{OL}^2 - 2\left[5 - 1 + \frac{1}{8}\right]V_{OL} + \frac{2\times5}{8} = 0$

ie $V_{OL}^2 - 8.25\,V_{OL} + 1.25 = 0$ ---- (2m)

$\boxed{V_{OL} = 0.1544\ V}$

Scanned with CamScanner

→ V_{IL} :

$$V_{IL} = V_{TO} + \frac{1}{K_n R_L} = 1 + \frac{1}{8} = 1.125V$$

---- (1m)

ie $\boxed{V_{IL} = 1.125V}$

→ V_{IH} :

$$V_{IH} = V_{TO} + \sqrt{\frac{8}{3}\frac{V_{DD}}{K_n R_L}} - \frac{1}{K_n R_L}$$

$$= 1 + \sqrt{\frac{\cancel{8}}{3} \times \frac{5}{\cancel{8}}} - \frac{1}{8}$$

$$= 1 + 1.291 - 0.125$$

---- (2m)

$\boxed{V_{IH} = 2.166\ V}$

iii) $NM_L = V_{IL} - V_{OL} = 1.125 - 0.1544 = \underline{0.9706V}$

$NM_H = V_{OH} - V_{IH} = 5 - 2.166 = \underline{2.834V}$

iv) VTC curve:-

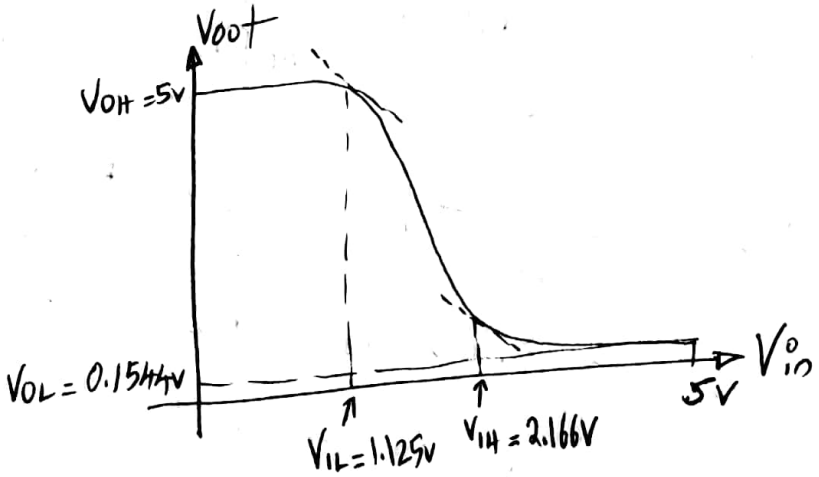

Scanned with CamScanner