# * Small-signal Analysis of Diff amp:

(Aim: To find expressions for $A_d$, $A_{cm}$, CMRR & $R_i$

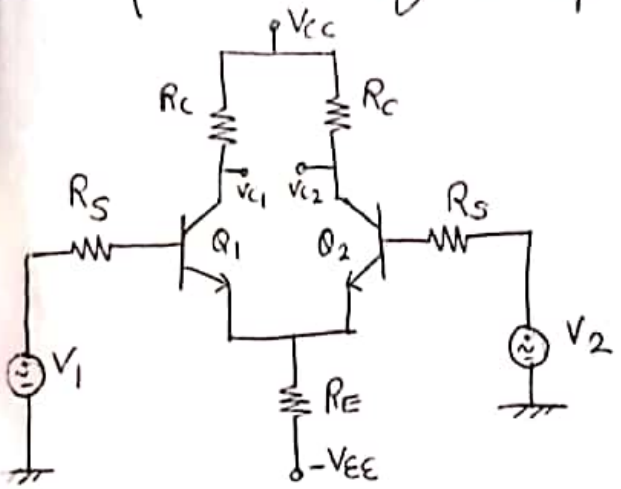


fig(2.1) Basic DIBO Diffamp

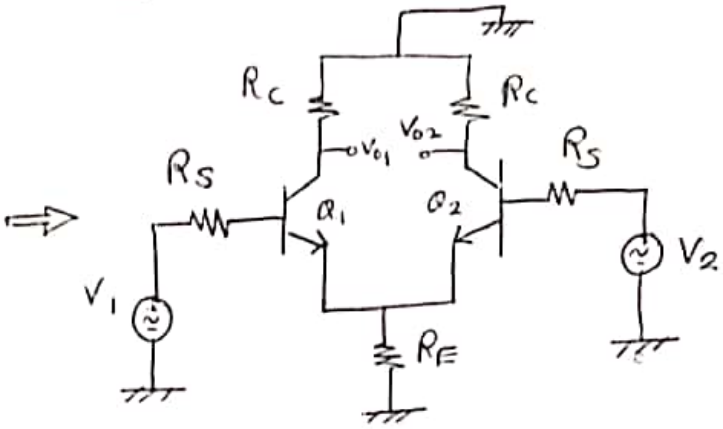


fig(2.2) AC equivalent of fig (2.2)

- Since, both the transistor's $Q_1$ and $Q_2$ are biased at the same Q-point, $r_{\pi_1} = r_{\pi_2} = r_\pi$ and $g_{m_1} = g_{m_2} = g_m$

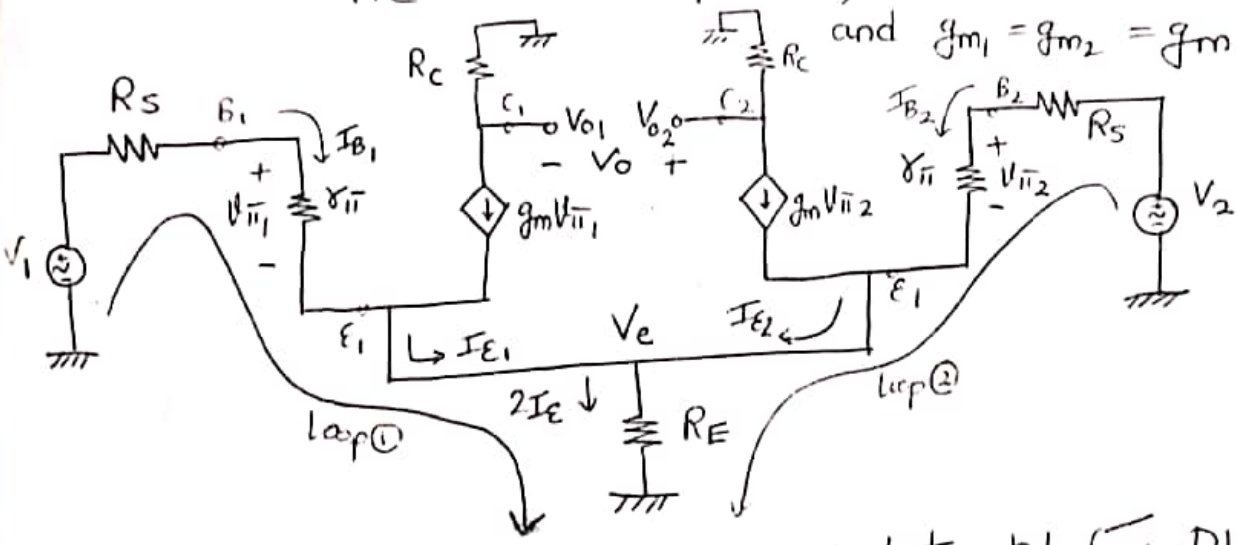


ckt (2.3): Small-signal hybrid-π equivalent ckt for DIBO Diffamp

From ckt(2.3), we have to apply KCL at node $V_e$,

ie $$\frac{V_e}{R_E} = g_m v_{\pi_1} + \frac{v_{\pi_1}}{r_\pi} + g_m v_{\pi_2} + \frac{v_{\pi_2}}{r_\pi}$$

$$\frac{V_e}{R_E} = \frac{g_m r_\pi v_\pi}{r_\pi} + \frac{v_{\pi_1}}{r_\pi} + \frac{g_m r_\pi v_{\pi_2}}{r_\pi} + \frac{v_{\pi_2}}{r_\pi}$$

Scanned with CamScanner

$$\frac{V_e}{R_E} = \frac{V_{\pi 1}}{r_\pi}(1+\beta) + \frac{V_{\pi 2}}{r_\pi}(1+\beta)$$

$g_m r_\pi = \beta$

$$\frac{V_e}{R_E} = 1+\beta\left[\frac{V_{\pi 1}}{r_\pi} + \frac{V_{\pi 2}}{r_\pi}\right]$$

,t $\frac{V_{\pi 1}}{r_\pi} = \frac{V_1 - V_e}{r_\pi + R_S}$ ; $\frac{V_{\pi 2}}{r_\pi} = \frac{V_2 - V_e}{r_\pi + R_S}$

$$\therefore \frac{V_e}{R_E} = (1+\beta)\left[\frac{V_1 - V_e}{r_\pi + R_S} + \frac{V_2 - V_e}{r_\pi + R_S}\right]$$

$$\frac{V_e}{R_E} = \frac{1+\beta}{r_\pi + R_S}\left[V_1 + V_2 - 2V_e\right]$$

$$\frac{V_e}{R_E} + 2V_e\left(\frac{1+\beta}{r_\pi + R_S}\right) = V_1 + V_2\left(\frac{1+\beta}{r_\pi + R_S}\right)$$

$$V_e\left[\frac{1}{R_E} + \frac{2(1+\beta)}{r_\pi + R_S}\right] = V_1 + V_2\left[\frac{1+\beta}{r_\pi + R_S}\right]$$

$$V_e\left[\frac{r_\pi + R_S + 2R_E(1+\beta)}{R_E\,\cancel{(r_\pi + R_S)}}\right] = (V_1 + V_2)\left[\frac{1+\beta}{\cancel{r_\pi + R_S}}\right] R_E(1+\beta)$$

$$\therefore V_e = \left[\frac{(V_1 + V_2)}{(r_\pi + R_S) + 2R_E(1+\beta)}\right]$$

$$\therefore \boxed{V_e = \left[\frac{(V_1 + V_2)}{2 + \frac{r_\pi + R_S}{R_E(1+\beta)}}\right]} \quad \text{— (1)}$$

Let $\frac{r_\pi + R_S}{(1+\beta)R_E} = x$ — (2)

Scanned with CamScanner

Substitute ② in ①, we get

$$\boxed{V_e = \frac{V_1+V_2}{2+x}} \quad — ③$$

a) Differential mode gain (Ad) for DIBO diffamp:

$$\boxed{A_d = \frac{V_{o2}-V_{o1}}{V_1-V_2}}$$

Note: $V_{o2} = V_{c2}$
$V_{o1} = V_{c1}$
from ckt (2.3)
$V_{o2} - V_{o1} = V_o$

From ckt (2.3), we have

$$V_{c2} = -g_m v_{\pi 2} R_c$$

$$= -(g_m I_{B2} r_\pi R_c) \qquad \because v_{\pi 2} = I_{B2} r_\pi$$

$$= -g_m r_\pi \left(\frac{V_2 - V_e}{R_s + r_\pi}\right) R_c \qquad \because I_{B2} = \frac{V_2 - V_e}{R_s + r_\pi}$$

ie $$\boxed{V_{c2} = -\frac{\beta R_c (V_2 - V_e)}{r_\pi + R_s}} \quad — ④ \qquad \because \beta = g_m r_\pi$$

Also, $$V_{c1} = -(g_m v_{\pi 1}) R_c$$

$$= -(g_m I_{B1} r_\pi R_c) \qquad \left(\because I_{B1} = \frac{V_1 - V_e}{R_s + r_\pi}\right)$$

$$\boxed{V_{c1} = -\frac{\beta R_c (V_1 - V_e)}{r_\pi + R_s}} \quad — ⑤$$

INDERJIT SINGH

Scanned with CamScanner

Now, $V_o = V_{C_2} - V_{C_1}$ $\left( \begin{aligned} V_o &= V_{o_2} - V_{o_1} \\ &= V_{C_2} - V_{C_1} \end{aligned} \right)$

$$= -\frac{\beta R_C}{R_S + r_\pi} \left[ (V_2 - \cancel{V_e}) - (V_1 - \cancel{V_e}) \right]$$

$$V_o = +\frac{\beta R_C}{R_S + r_\pi} \left[ V_1 - V_2 \right] \quad - (6)$$

Now, $A_d = \dfrac{V_o}{V_1 - V_2}$

$$\therefore \boxed{A_d \Big|_{DIBO'} = \frac{\beta R_C}{R_S + r_\pi}} \quad - (A)$$

If swamping resistor is included then,

$$\boxed{A_d \Big|_{DIBO} = \frac{\beta R_C}{R_S + r_\pi + \beta R_{Eswamp}}} \quad - (7)$$

So, the effect of swamping resistor ($R_{Eswamp}$) is to ↓se the differential mode gain $A_d$ for a DIBO diffamp, but it makes $A_d$ independent of temperature and power supply variations.

- Now, if we consider one-sided o/p at the collector of $Q_2$, it becomes an DIUO diffamp configuration (So step's uptill eq$^n$ (3) are same)

Scanned with CamScanner

For a DIUO, $A_d = \frac{V_{o2}}{V_1 - V_2}$ $\qquad$ $V_{o2} = V_{c2} = V_o$

$$V_o = V_{c2} = -g_m v_{\pi 2} R_c$$

$$\text{ie } V_o = -g_m I_{B_2} r_\pi R_c$$

$$= -g_m r_\pi \left( \frac{V_2 - V_e}{R_s + r_\pi} \right) R_c$$

$v_{\pi 2} = I_{B_2} r_\pi$

Since $I_{B_2} = \frac{V_2 - V_e}{R_s + r_\pi}$

$$\boxed{V_o = -\frac{\beta R_c (V_2 - V_e)}{r_\pi + R_s}} \quad - (8)$$

We know from eq$^n$ (3) that $V_e = \frac{V_1 + V_2}{2 + x}$

$$\text{ie } V_o = \frac{-\beta R_c}{r_\pi + R_s} \left[ V_2 - \left( \frac{V_1 + V_2}{2 + x} \right) \right]$$

$$V_o = \frac{-\beta R_c}{r_\pi + R_s} \left[ \frac{V_2(2+x) - V_1 - V_2}{2 + x} \right]$$

$$V_o = \frac{-\beta R_c}{r_\pi + R_s} \left[ \frac{V_2(1+x) - V_1}{2 + x} \right] \quad - (9)$$

Here, $x = \frac{r_\pi + R_s}{(1+\beta) R_E}$

If $R_E$ is considered v. high,

then $x$ is v. small

INDERJIT SINGH

Scanned with CamScanner

Then eq$^n$ (9) becomes,

$$V_o = -\frac{\beta R_c}{r_\pi + R_s}\left[\frac{V_2 - V_1}{2}\right]$$

ie $$V_o = \frac{\beta R_c}{r_\pi + R_s}\frac{(V_1 - V_2)}{2}$$

Now, $$A_d\Big|_{DIUO} = \left(\frac{V_o}{V_1 - V_2}\right)$$

$$\therefore \boxed{A_d\Big|_{DIUO} = \frac{\beta R_c}{2(r_\pi + R_s)}} \quad - (B)$$

If Swamping resistor is included then,

$$\boxed{A_d\Big|_{DIUO} = \frac{\beta R_c}{2(r_\pi + R_s + \beta R_{Eswamp})}} \quad - (10)$$

The effect of $R_{Eswamp}$ can be seen from eq$^n$ (10), ie it ↓ses the differential mode gain Ad for a DIUO diffamp configuration.

- Ad is independent of temperature and power supply variations with $R_{Eswamp}$, but it's differential mode gain ↓ses.

Scanned with CamScanner

b) Common-mode gain (Acm) :-

For common-mode of operation, select $V_1 = V_2 = V$, where both I/P signals are exactly in phase and of the same amplitude and frequency thereby,

$$V_{in} = \frac{V_1 + V_2}{2} = \frac{V+V}{2} = \underline{\underline{V}}$$

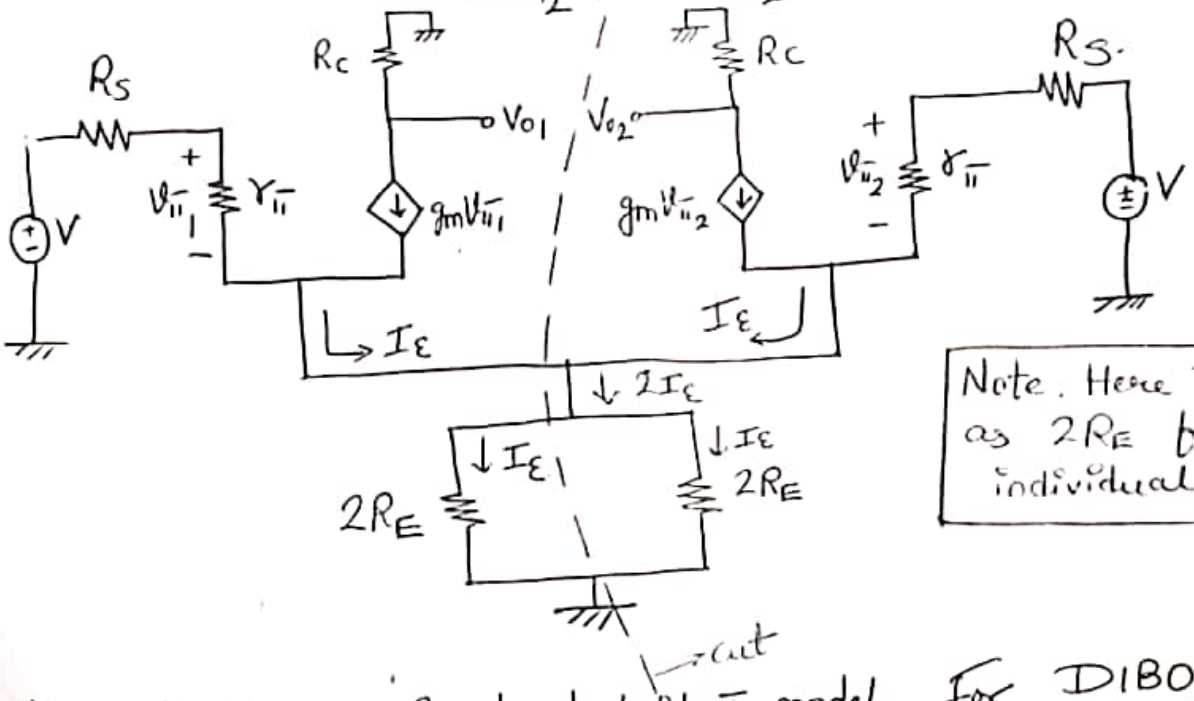


Note. Here $R_E$ appear as $2R_E$ for each individual stage.

fig 2.4): Small-signal hybrid-π model for DIBO Diffamp in common-mode of operation.

- A cut-section of above model reveals that they are mirror image's of each other.
- For analysis purpose, we can consider only one section as,

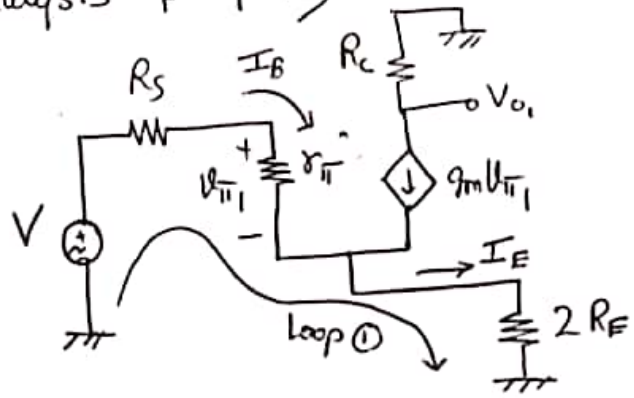


ckt (2.5) A cut-section of fig (2.4)

Scanned with CamScanner

KVL applied to B-E loop ① of $Q_1$ in ckt (2.5) reveals,

$$V - I_B R_S - I_B r_\pi - 2 I_E R_E = 0 \qquad (I_E = (1+\beta) I_B)$$

$$V = I_B \left( r_\pi + R_S + 2(1+\beta) R_E \right) \quad - ①$$

At the o/p side,

$$V_{o_1} = - g_m V_{\pi_1} R_C$$

$$= - g_m R_C (I_B r_\pi) \qquad (g_m r_\pi = \beta)$$

$$= - \beta R_C I_B$$

$$\therefore \quad V_{o_1} = - \beta R_C \left( \frac{V}{r_\pi + R_S + 2(1+\beta) R_E} \right) \qquad (\text{From } ①)$$

$$\boxed{\frac{V_{o_1}}{V} = \frac{-\beta R_C}{r_\pi + R_S + 2(1+\beta) R_E}} \quad - ②$$

By defination, Common-mode o/p signal is $V_{cm_{o/p}} = \frac{V_{o1} + V_{o2}}{2}$

while Common-I/p signal, $V_{cm_{I/p}} = \frac{V_1 + V_2}{2}$

Giving $V_{cm_{I/p}} = V_1 = V_2 = V \Rightarrow V_{cm\,o/p} = V_{o1} = V_{o2} = V_o$

(Since both I/P signals are exactly equal and stages are symmetrical)

$$\therefore \quad A_{cm}\Big|_{DIBO} = \frac{V_o}{V_{cm}} = \frac{V_o}{V}$$

INDERJIT SINGH

Scanned with CamScanner

∴ From (2),

$$\boxed{A_{cm}\Big|_{DIBO} = -\frac{\beta R_C}{R_S + r_\pi + 2(1+\beta)R_E}} \quad - (C)$$

Assuming $2(1+\beta)R_E >> R_S + r_\pi$ & $1+\beta \simeq \beta$

$$\boxed{A_{cm} = \left|\frac{R_C}{2R_E}\right|} \quad - (D)$$

Equation (C) and (D) is valid and same for all Diffamp configurations' (DIBO, DIUO, SIBO, SIUO) " and Ad "

Now, Let's find the expression for CMRR for a DIBO Diffamp configuration.

$$CMRR = \left|\frac{A_d}{A_{cm}}\right|$$

$$A_d\Big|_{DIBO} = \frac{\beta R_C}{R_S + r_\pi}$$

$$A_{cm}\Big|_{DIBO} = \left|\frac{R_C}{2R_E}\right|$$

INDERJIT SINGH

Scanned with CamScanner

$$\therefore \quad CMRR = \left| \frac{\dfrac{\beta R_C}{(R_S + r_\pi)}}{\dfrac{R_C}{2R_E}} \right|$$

$$\text{ie} \quad CMRR = \left| \frac{\beta \cancel{R_C}}{R_S + r_\pi} \times \frac{2R_E}{\cancel{R_C}} \right|$$

$$CMRR = \left| \frac{2\beta R_E}{R_S + r_\pi} \right|$$

We know, $\beta = r_\pi$

(Assuming $r_\pi >> R_S$)

$$CMRR = \left| \frac{2 \times \cancel{r_\pi} g_m R_E}{\cancel{r_\pi}} \right|$$

$$\boxed{CMRR\Big|_{DIBO} = \left| 2 g_m R_E \right|} \quad \text{---- (E)}$$

From above eq$^n$, CMRR depends on following factors:-

a) The device transconductance

$$g_m = \frac{I_{CQ}}{V_T} \quad \text{or} \quad g_m = \frac{\beta}{r_\pi}$$

which indicates that it is Q-point dependent.

b) The external emitter resistor ($R_E$). (To ↑se CMRR value, $R_E$ has to be ↑sed)

c) Thermal voltage ($V_T$) : which makes it highly temperature dependent since $V_T = KT/q$.

INDERJIT SINGH

Scanned with CamScanner

## * Differential mode I/P resistance $R_{id}$ and Common-mode I/P resistance ($R_{icm}$) :

(impedance) (impedance)

- Two I/P resistances for a Diffamp
  1) $R_{id}$ → resistance seen by a differential-mode signal source.
  2) $R_{icm}$ → resistance seen by a common-mode signal source.

### a) Differential mode I/P resistance ($R_{id}$) :-

- $R_{id}$ is the effective resistance between the two I/P base terminals when a differential-mode signal is applied.

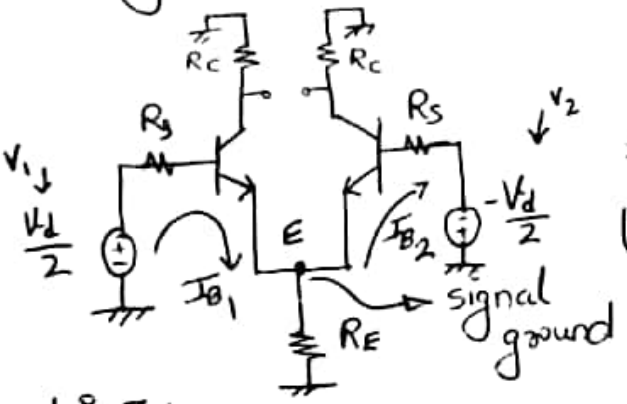


fig 3.1

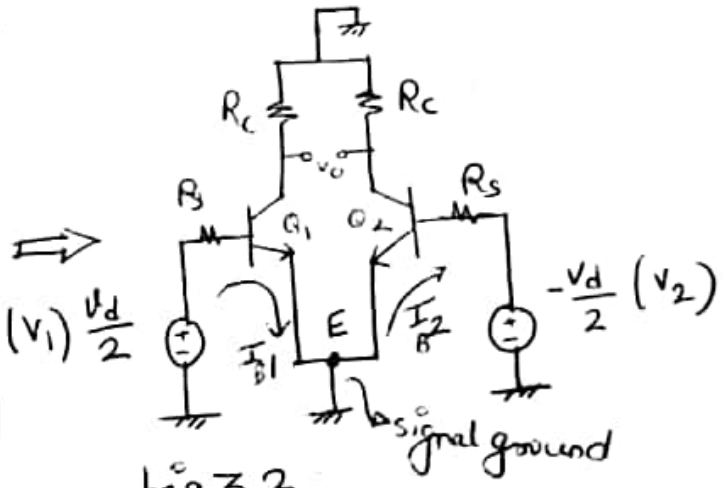


fig 3.2

We know, $V_1 = V_{cm} + \frac{V_d}{2}$ , $V_2 = V_{cm} - \frac{V_d}{2}$

Since, Common-mode signal $V_{cm} = 0$

$$V_1 = \frac{V_d}{2} \quad \& \quad V_2 = -\frac{V_d}{2}$$

DERJIT SINGH

Scanned with CamScanner

$I_{B_1}$ → current due to $+\frac{V_d}{2}$

$I_{B_2}$ → current due to $-\frac{V_d}{2}$

$\boxed{I_{B_1} = I_{B_2} = I_B}$

Since $I_{B_1}$ & $I_{B_2}$ are equal, drop across $R_E$ will be <u>zero</u> for ac. Hence point E is at (ac) ground. (as seen in fig 3.1)

Now, we consider one half of section (as fig 3.2),

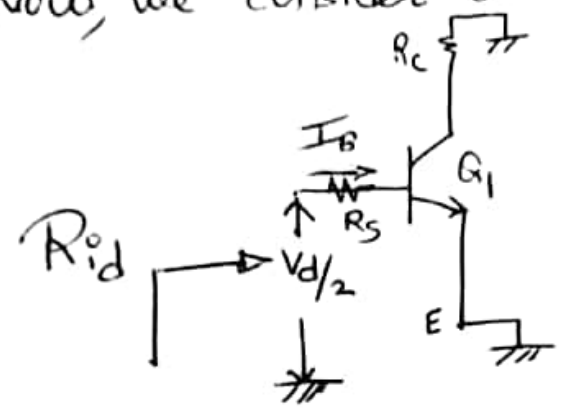


fig(3.3)

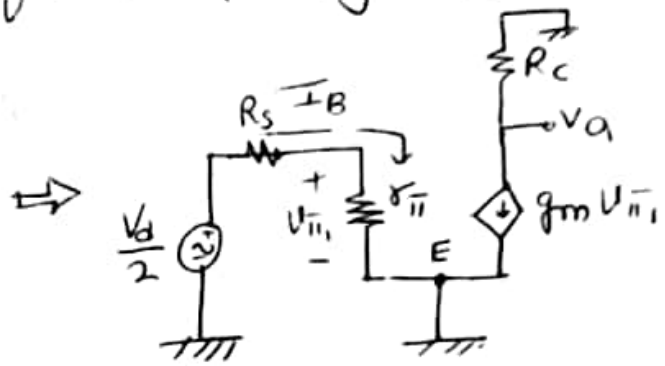


fig(3.4)

From fig(3.4),

$$\frac{V_d/2}{I_B} = (R_S + r_\pi) \quad \text{(a)}$$

Now,

$$\boxed{R_{id} = \frac{V_d}{I_B} = 2(R_S + r_\pi) \text{ ; or } 2(r_\pi) \text{ (If } R_S \text{ is absent)}}$$

→ BJT Diffamp with swamping resistor

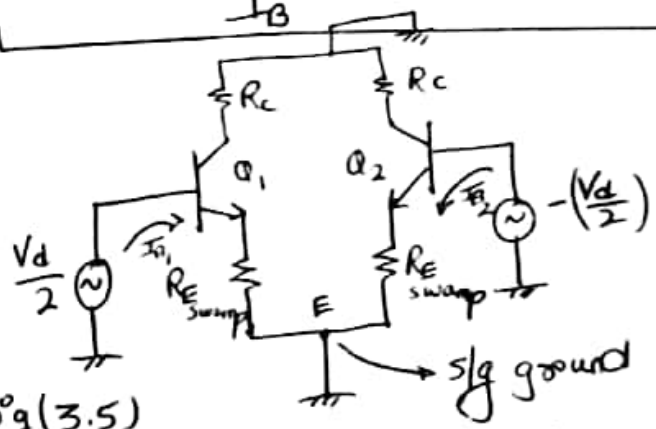


fig(3.5)

Here, $R_S$ we consider to be not present

Similarly, considering one section for fig (3.5),

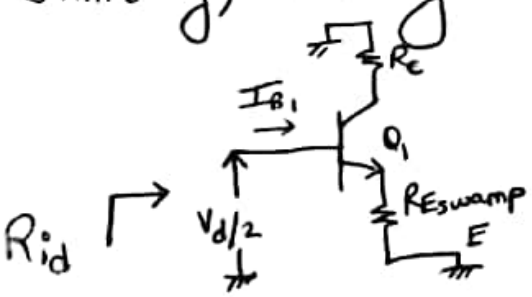


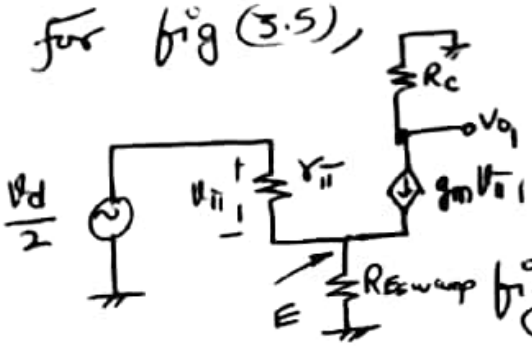


fig(3.6)

INDERJIT SINGH

Scanned with CamScanner

From fig (3.6),

$$\frac{\frac{V_d}{2}}{I_B} = r_\pi + (1+\beta) R_{E\,swamp}$$ (By Resistance reflection rule).

$$\boxed{R_{id} = \frac{V_d}{I_B} = 2\left[r_\pi + (1+\beta) R_{E\,swamp}\right]} \quad - (b)$$

From above eq$^n$ (b), we notice that $R_{id}$ ↑ses by including swamping resistance ($R_{E\,swamp}$).

b) <u>Common-mode I/P resistance ($R_{icm}$):</u>

- $R_{icm}$ is the effective resistance between the two I/P base terminals when a common-mode signal is applied.

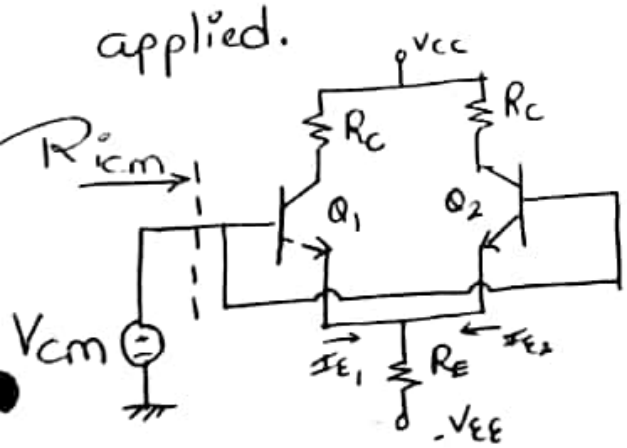


fig 4.1 BJT Diff amp with Common-mode I/P signal

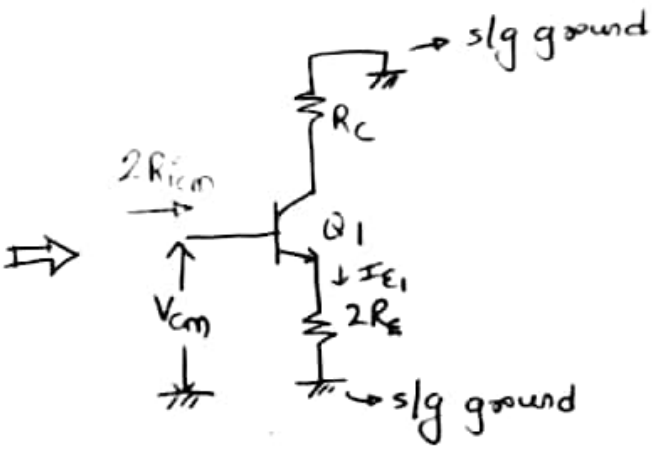


fig(4.2) Equivalent common-mode half circuit.

Scanned with CamScanner

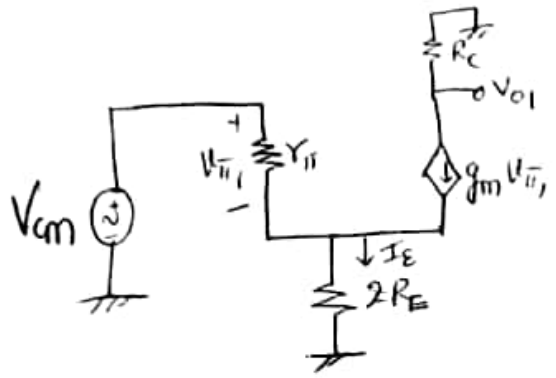


fig (4.3) hybrid-π equivalent of ckt (fig (4.2))

From fig (4.3), we get

$$2R_{icm} = r_\pi + (1+\beta)\,2R_E \qquad (\because I_E = (1+\beta)I_B)$$

$$\therefore \boxed{R_{icm} = \frac{1}{2}\left[r_\pi + (1+\beta)\,2R_E\right]} \quad - (c)$$

* O/P resistance for BJT Diffamp (For All Configurations): DIBO, DIVO, SIVO, SIBO

$$\boxed{R_O = R_C = R_{C_1} = R_{C_2}}$$

Scanned with CamScanner

# Summary: BJT Diffamp:

**DC Analysis:-** $I_{CQ} = \beta\left(\frac{V_{EE}-V_{BE}}{R_S + 2\beta R_E}\right)$ | $I_{CQ} = \beta\left(\frac{V_{EE}-V_{BE}}{R_S + \beta(2R_E + R_{E,swamp})}\right)$

$V_{CEQ} = V_{CC} + V_{EE} - I_{CQ}(R_C + 2R_E)$ ; | $V_{CEQ} = V_{CC} + V_{EE} - I_{CQ}[R_C + 2R_E + R_{E,swamp}]$

## AC analysis.

1] DIBO:

$A_d = \frac{\beta R_C}{R_S + r_\pi}$ | ; $A_d = \frac{\beta R_C}{R_S + r_\pi + \beta R_{E,swamp}}$

$A_{cm} = \left|\frac{R_C}{2R_E}\right|$

$R_{id} = 2r_\pi$ | ; $R_{id} = 2[r_\pi + (1+\beta)R_{E,swamp}]$

$R_{icm} = \frac{1}{2}(r_\pi + (1+\beta)2R_E)$

2] DIUO

$A_d = \frac{\beta R_C}{2(r_\pi + R_S)}$ | ; $A_d = \frac{\beta R_C}{2(R_S + r_\pi + \beta R_{E,swamp})}$

$A_{cm} = \left|\frac{R_C}{2R_E}\right|$

$R_{id}, R_{icm} \rightarrow$ same for all configurations

$R_{Eswamp}$ ↓ Swamping resistor

3] SIBO

$A_d = \frac{\beta R_C}{r_\pi + R_S}$

$A_{cm} = \left|\frac{R_C}{2R_E}\right|$

4] SIUO

$A_d = \frac{\beta R_C}{2(r_\pi + R_S)}$

$A_{cm} = \left|\frac{R_C}{2R_E}\right|$



Scanned with CamScanner

Ex: Find Q-point, $A_d$, $A_{cm}$ and CMRR of circuit below

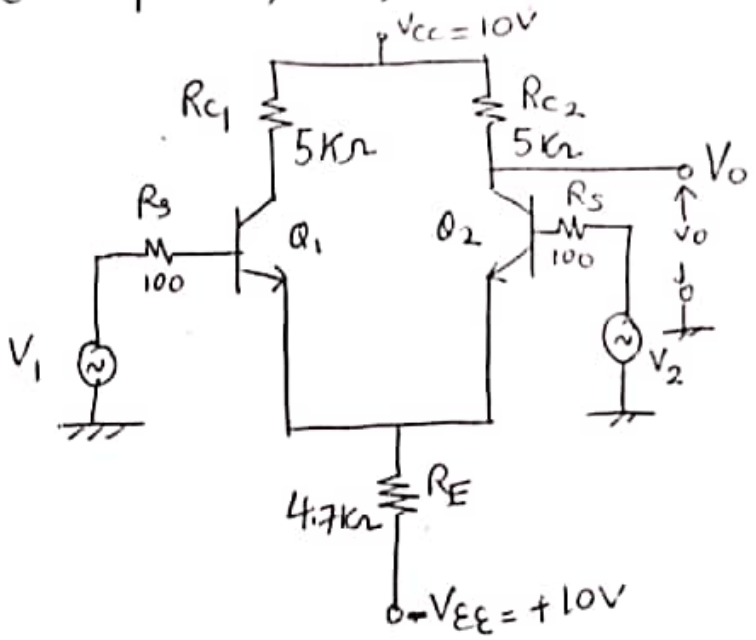


$\beta_1 = \beta_2 = 100$

$V_{BE} = 0.7$ Volts.

Soln: Above ckt is a DIUO diffamp

DC Analysis:

- $$I_{CQ} = \beta \left( \frac{V_{EE} - V_{BE}}{R_S + \beta(2R_E)} \right)$$

$$I_{CQ} = 100 \left( \frac{10 - 0.7}{100 + 100 \times 2 \times 4.7K} \right)$$

$$I_{CQ} = 1.063 \text{ mA}$$

- $$V_{CEQ} = V_{CC} + V_{EE} - I_{CQ}(R_C + 2R_E)$$

$$= 10 + 10 - 1.063\text{mA}(5K\Omega + 2 \times 4.7K\Omega)$$

$$V_{CEQ} = 4.69 \text{ V}$$

$\therefore$ Q-point $\equiv (I_{CQ_1}, V_{CEQ_1}) \equiv (I_{CQ_2}, V_{CEQ_2}) \equiv (1.063\text{mA}, 4.69\text{V})$

Scanned with CamScanner

Now, $A_d = \dfrac{\beta R_c}{2(r_\pi + R_s)}$

$$r_\pi = \frac{\beta V_T}{I_{CQ}} = \frac{100 \times 26 \times 10^{-3}}{1.063 \times 10^{-3}} = 2.45\,K\Omega$$

$$\therefore A_d = \frac{\beta R_c}{2(r_\pi + R_s)}$$

$$= \frac{100 \times 5K\Omega}{2(2.45K + 100)}$$

$$\underline{A_d = 98.04}$$

$$\therefore A_{cm} = \left| \frac{R_c}{2R_E} \right|$$

$$= \left| \frac{5K}{2 \times 4.7K} \right|$$

$$\underline{A_{cm} = 0.532}$$

$$\therefore CMRR = \left| \frac{A_d}{A_{cm}} \right| = \left| \frac{98.04}{0.532} \right| = 184.32$$

$$\therefore CMRR|_{dB} = 20\log_{10} \left| \frac{A_d}{A_{cm}} \right|$$

$$= 20\log_{10}(184.32)$$

$$\boxed{CMRR_{dB} = 45.3\ dB}$$

Scanned with CamScanner

Ex: For the given ckt find $I_{CQ}$, $V_{CEQ}$, $A_d$, $A_{cm}$ and CMRR

(May 2014) 10M

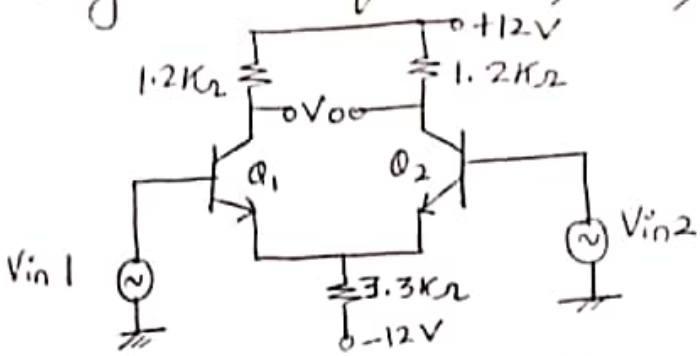


$\beta_1 = \beta_2 = 100$

$V_{BE} = 0.7V$

Sol$^n$: Above ckt is a DIBO Diffamp.

Here, $R_B$ is not present

DC Analysis: $I_{BQ} = \dfrac{V_{EE} - V_{BE}}{2R_E\beta + R_B} = \dfrac{12 - 0.7}{2 \times 3.3K \times 100 + 0}$

$I_{BQ} = 17.12\,\mu A$

$I_{CQ} = \beta I_{BQ} = \underline{1.71\ mA}$

$\cdot\ V_{CEQ} = (V_{CC} + V_{EE}) - I_{CQ}(R_C + 2R_E) = (12+12) - 1.71mA\,(3.3K \times 2 + 1.2K)$

$\underline{V_{CEQ} = 10.66\,V}$

$r_\pi = \dfrac{\beta V_T}{I_{CQ}} = \dfrac{100 \times 26mV}{1.71mA} = 1.52\ K\Omega$

AC Analysis:-

$\cdot\ A_d = \dfrac{\beta R_C}{R_S + r_\pi}$

$A_d = \dfrac{100 \times 1.2K}{0 + 1.52K} = 78.95$

$\cdot\ A_{cm} = \left|\dfrac{R_C}{2R_E}\right| = \left|\dfrac{1.2K}{2 \times 3.3K}\right| = 0.182$

$\cdot\ CMRR = \left|\dfrac{A_d}{A_{cm}}\right| = \left|\dfrac{78.95}{0.182}\right| = 434.225$

$\cdot\ CMRR\ in\ dB = 20\log_{10}\left(\dfrac{A_d}{A_{cm}}\right) = 20\log_{10}(434.225)$

$CMRR|_{dB} = \underline{52.75\ dB}$

Scanned with CamScanner

Ex:

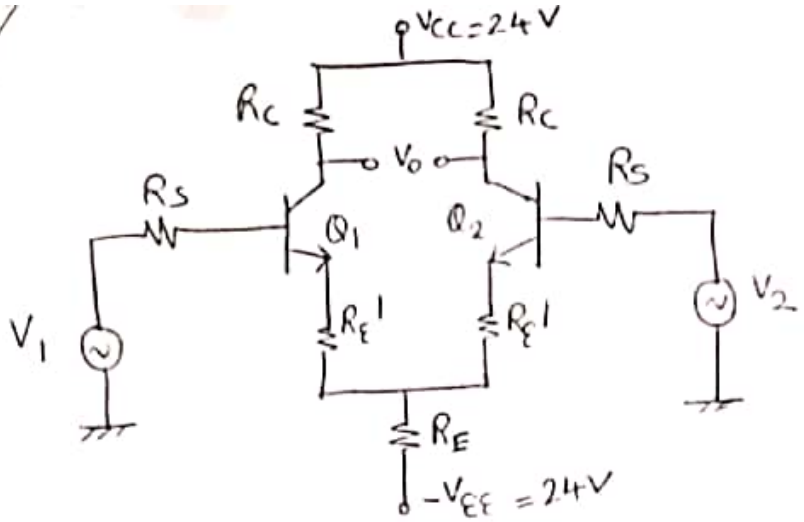


$R_E'$ → swamping resistor

$R_S = 600\Omega$

$R_E' = 100\Omega$

$R_E = 10K$

$R_C = 12K\Omega$

$\beta = 100$

Find $I_{CQ}$, $V_{CEQ}$, $A_d$, $A_{cm}$ and CMRR

(Assume $V_{BE} = 0.7V$)

Soln: Above ckt is a DIBO diff amp.

DC Analysis:

$$I_{CQ} = \beta\left(\frac{V_{EE} - V_{BE}}{R_S + \beta(2R_E + R_E')}\right)$$

$$I_{CQ} = 100\left(\frac{24 - 0.7}{600 + 100(2\times 10K + 100)}\right)$$

$$I_{CQ} = 1.158 \text{ mA}$$

$$V_{CEQ} = V_{CC} + V_{EE} - I_{CQ}[R_C + 2R_E + R_E']$$

$$= 24 + 24 - 1.158\text{mA}[12K + 2\times 10K + 100]$$

$$V_{CEQ} = 10.83 \text{ V}$$

; $r_\pi = \frac{\beta V_T}{I_{CQ}} = 2.245K\Omega$

AC Analysis:-

- $A_d = \frac{\beta R_C}{2(R_S + r_\pi + \beta R_E')} = \frac{100\times 12K}{2(600 + 2.245K + 100\times 100)}$

$A_d = 46.71$

- $A_{cm} = \left|\frac{R_C}{2R_E}\right| = 0.6$

- $CMRR = \left|\frac{A_d}{A_{cm}}\right| = \left|\frac{46.71}{0.6}\right| = 77.85$ ; $CMRR|_{dB} = 20\log_{10}(77.85)$

$CMRR = 37.82 dB$

INDERJIT SINGH

Scanned with CamScanner