12. A amplifier with transistor parameters $\beta = 100$, $V_{BE} = 0.7V$ is shown in figure 6 **[10]**

a) Calculate the lower cut-off frequency of the circuit

b) Calculate the mid-band voltage gain

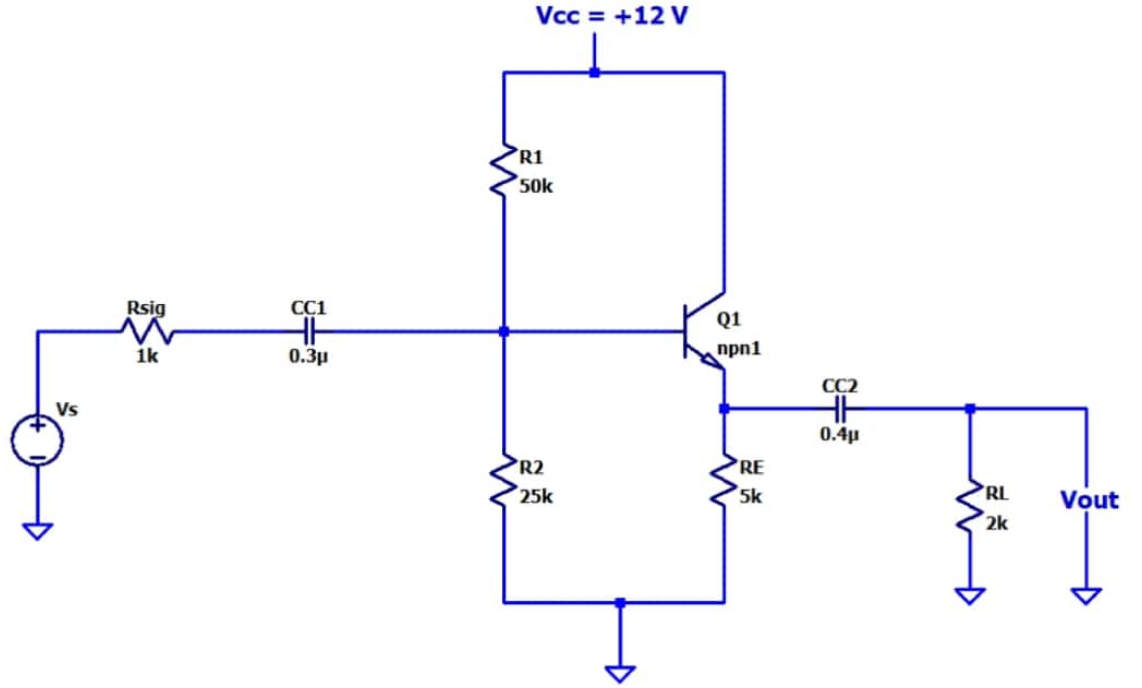

Figure 6: Question 12

Answers: $I_{BQ} = 6.325\mu A$ $\quad I_{CQ} = 0.6325mA$ $\quad r_\pi = 4.11k\Omega$ $\quad g_m = 24.37mA/V$
$f_{LCC1} = 33.2Hz$ $\quad f_{LCC2} = 194.08Hz$ $\quad f_L = 194.08Hz$ $\quad A_{VMID} = 0.911$

Scanned by CamScanner

Soln:- DC Analysis:-

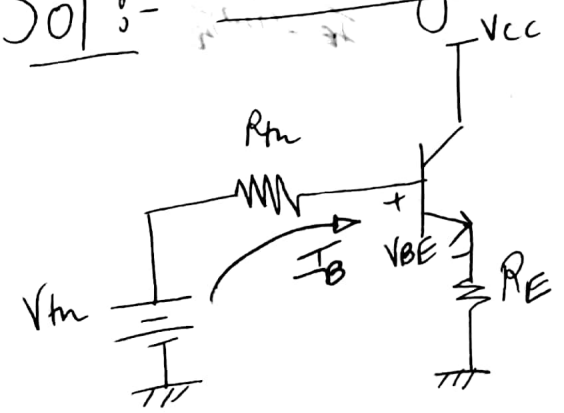

$$V_{th} = \frac{R_2}{R_1+R_2} \times V_{cc} = \frac{25K}{25K+50K} \times 12$$

$$V_{th} = \underline{4V}$$

$$R_{th} = R_1 \| R_2 = 50K \| 25K = \underline{16.67\,K\Omega}$$

$$I_{BQ} = \frac{V_{th} - V_{BE}}{R_{th} + (1+\beta)R_E} = \frac{4-0.7}{16.67K + 101 \times 5K}$$

$$I_{BQ} = \underline{6.325\,\mu A}$$

- $I_{CQ} = \beta I_{BQ} = \underline{0.6325\,mA}$

→ Small signal parameters:-

$$r_{\pi} = \frac{\beta V_T}{I_{CQ}} = \frac{100 \times 26mV}{0.6325mA} = \underline{4.11K\Omega}$$

$$g_m = \frac{I_{CQ}}{V_T} = \frac{0.6325mA}{26mV} = 24.32\,\frac{mA}{V}$$

INDERJIT SINGH

Scanned by CamScanner

• Low frequency (AC) equivalent circuit :-

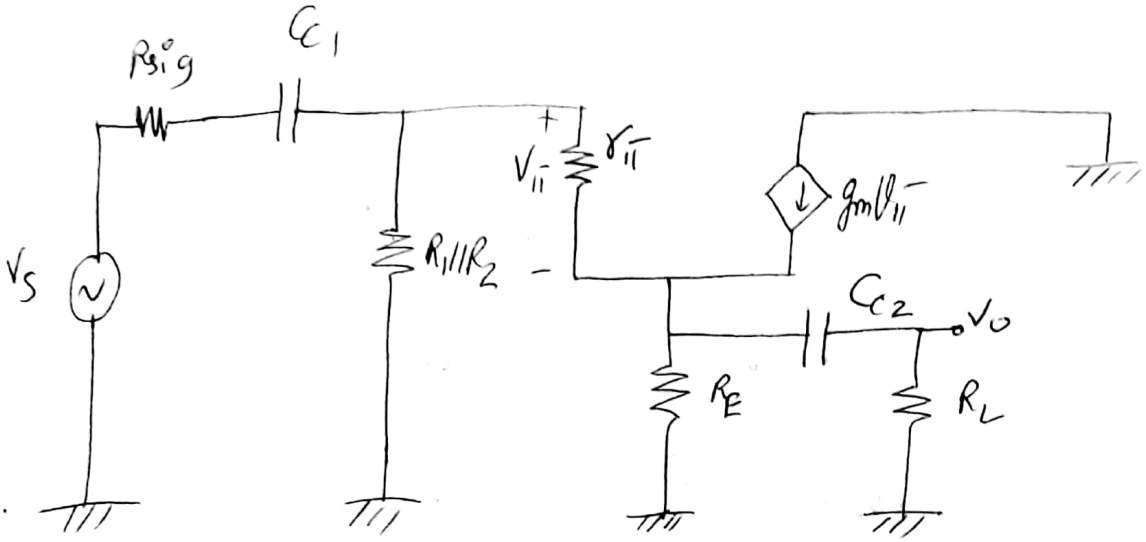

For C_{c_1}:

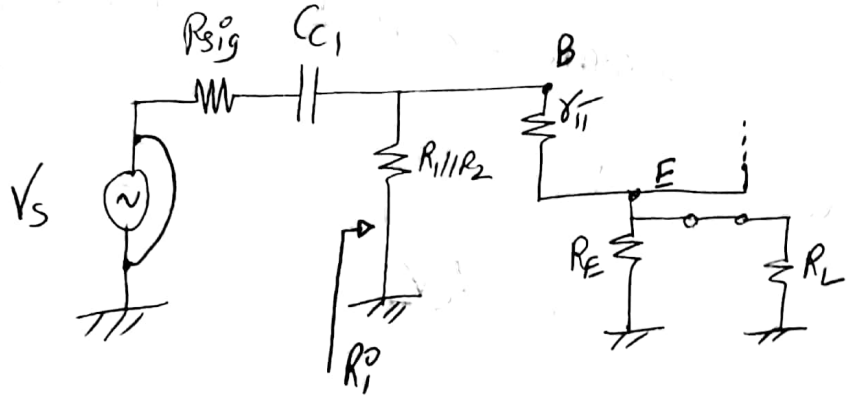

$I_E = (1+\beta) I_B$

$$R_i^o = R_1 \| R_2 \| \left[r_\pi + (1+\beta)(R_E \| R_L) \right]$$

$$R_{eq} = R_i^o + R_{sig}$$

$$\tau = R_{eq} \cdot C_{c_1}$$

$$\boxed{f_{L C_{c_1}} = \frac{1}{2\pi R_{eq} \cdot C_{c_1}}}$$

lower cut-off frequency due to C_{c_1} alone.

Scanned by CamScanner

$$R_i^o = \overbrace{R_1 \| R_2}^{R_{in}} \| \left[r_\pi + (1+\beta)(R_E \| R_L) \right]$$

$$= 16.67K \| \left[4.11K + 101 \times (5K \| 2K) \right]$$

$$= 16.67K \| \left[4.11K + 101 \times 1.428K \right]$$

$$= 16.67K \| \left[148.338K \right]$$

$$= \underline{14.98 K\Omega}$$

$$f_{L_{C_1}} = \frac{1}{2\pi (R_{sig}^o + R_i^o) C_{C_1}} = \frac{1}{2\pi (1K + 14.98K) 0.3\mu F} = \underline{33.320 Hz}$$

For C_{C_2}:-

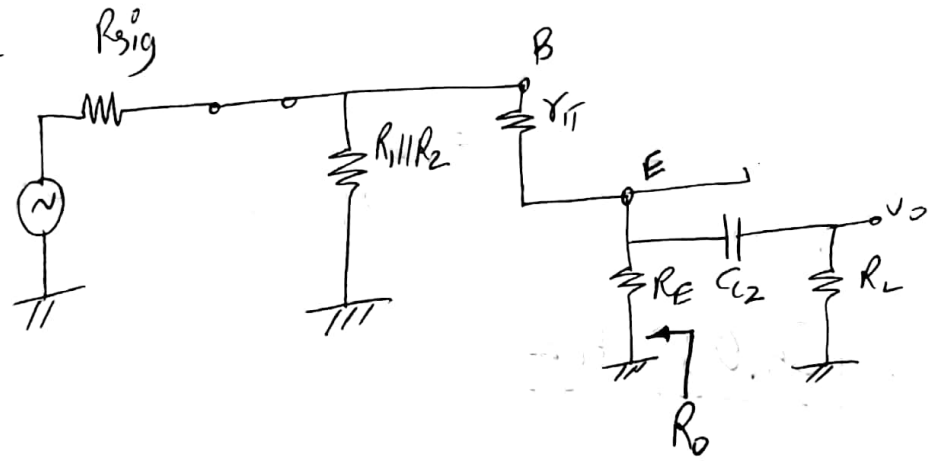

$I_E = (1+\beta) I_B$

$I_B = \frac{I_E}{1+\beta} = \frac{I_E}{1+\beta}$

$$R_o = R_E \| \left[\frac{r_\pi + R_1 \| R_2 \| R_{sig}^o}{\beta} \right]$$

$$R_{eq} = R_o + R_L \quad ; \quad \tau = R_{eq} \cdot C_{C_2}$$

$$\boxed{f_{L_{C_2}} = \frac{1}{2\pi R_{eq} C_{C_2}}}$$

INDERJIT SINGH

Scanned by CamScanner

$$R_o = R_E \parallel \left[\frac{R_{sig} \parallel \overbrace{R_1 \parallel R_2}^{16.67K} + r_\pi}{\beta} \right]$$

$$= 5K \parallel \left[\frac{\overbrace{1K \parallel 16.67K}^{943.4} + 4.11K}{100} \right]$$

$$= 5K \parallel \left[50.534 \right]$$

$$R_o = 50.028$$

$$R_{eq} = R_o + R_L \Rightarrow$$

$$f_{LC_2} = \frac{1}{2\pi (R_o + R_L) C_2} = \frac{1}{2\pi (50.028 + 2K) 0.4\mu F}$$

$$f_{LC_2} = \underline{194.088 \text{ Hz}}$$

Mid-frequency AC equivalent ckt :-

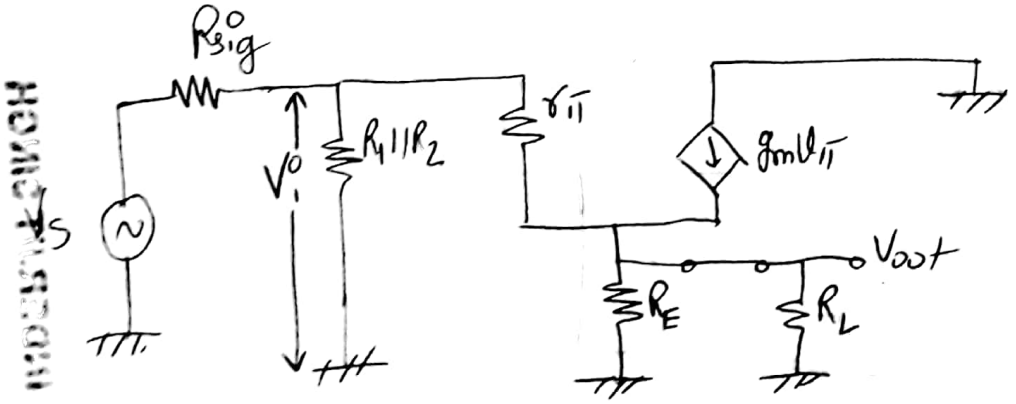

INDERJIT SINGH

Scanned by CamScanner

For simplicity, let us find gain $\frac{V_o}{V_i}$ without <u>Load R_L</u>:-

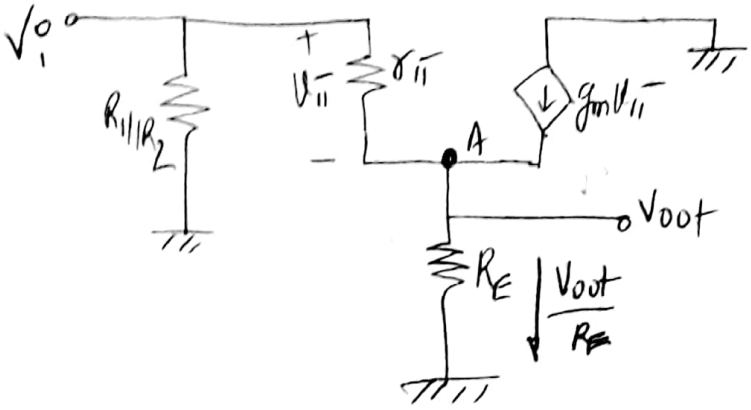

$$V_\pi = V_{in} - V_{out}$$

$$\frac{V_{in} - V_{out}}{r_\pi} + g_m(V_i - V_{out}) = \frac{V_{out}}{R_E} \quad \text{--- (KCL) at node A}$$

$$\frac{V_i}{r_\pi} - \frac{V_{out}}{r_\pi} + g_m V_i - g_m V_{out} = \frac{V_{out}}{R_E}$$

$$V_i\left(\frac{1}{r_\pi} + g_m\right) = V_{out}\left(\frac{1}{R_E} + g_m + \frac{1}{r_\pi}\right)$$

$r_\pi >> 1$; $\frac{1}{r_\pi} \approx$ v. small.

$$V_i\left(\frac{1 + g_m r_\pi}{r_\pi}\right) = V_{out}\left(\frac{1}{R_E} + g_m\right)$$

$g_m r_\pi \approx \beta$

$1 + \beta \approx \beta$

$$V_i\left(\frac{1+\beta}{g\, r_\pi}\right) = V_{out}\left(\frac{1}{R_E} + g_m\right)$$

$$V_i\left(\frac{\beta}{r_\pi}\right) = V_{out}\left(\frac{1}{R_E} + g_m\right)$$

$$V_i(g_m) = V_{out}\left(\frac{1}{R_E} + g_m\right) = V_{out}\left(\frac{1 + g_m R_E}{R_E}\right)$$

ie $\boxed{\frac{V_{out}}{V_i} = \frac{R_E}{\frac{1}{g_m} + R_E}}$ → voltage gain of a common-collector stage

INDERJIT SINGH

Scanned by CamScanner

let us put R_L back :-

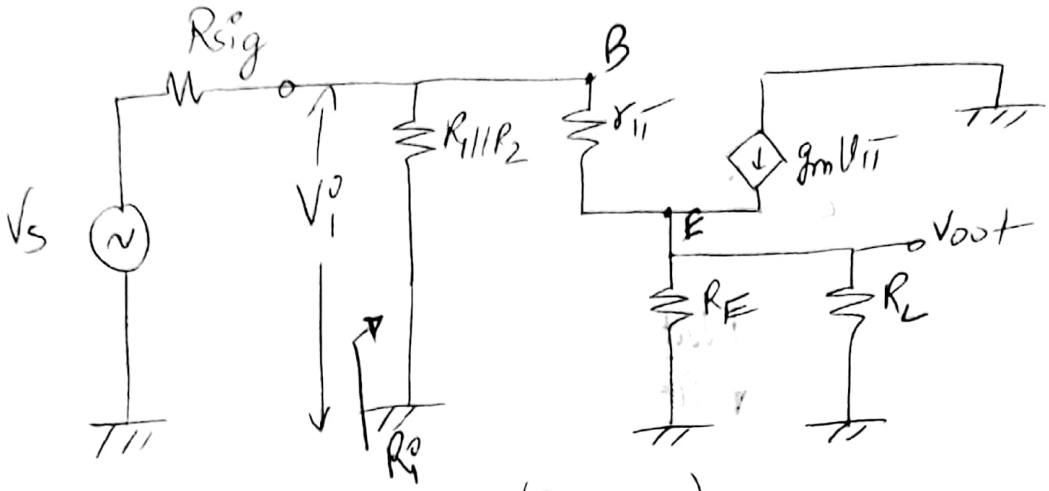

$$\frac{V_{out}}{V_i} = \frac{(R_E \| R_L)}{\frac{1}{g_m} + (R_E \| R_L)}$$

$$\rightarrow A_{v_{mid}} \text{ with } R_{sig} = \frac{V_{out}}{V_s} = \frac{V_{out}}{V_i} \times \frac{V_i}{V_s}$$

$$\frac{V_i}{V_s} = \frac{R_i}{R_i + R_{sig}}$$

$$R_i = R_1 \| R_2 \| \left[r_\pi + (1+\beta)(R_E \| R_L) \right]$$

$$\approx 14.98 k\Omega$$

$$\frac{V_{out}}{V_i} = \frac{(R_E \| R_L)}{\frac{1}{g_m} + (R_E \| R_L)} = \frac{1.428K}{41.106 + 1.428K} = \underline{0.972}$$

$$\frac{V_i}{V_s} = \frac{14.98K}{14.98K + 1K} = \underline{0.937}$$

INDERJIT SINGH

$$A_{v_{mid}} \text{ with } R_{sig} = 0.937 \times 0.972 = 0.911$$

$$|A_{v_{mid}} \text{ with } R_{sig}|_{dB} = 20\log_{10}(0.911) = \underline{-0.809 \text{ dB}}$$

Scanned by CamScanner