f_β and f_T derivation for BJT :-

f_β : Beta-cut-off frequency

Definition: Frequency at which the current gain of BJT fall by 3dB from its maximum value ie β_{dc} or h_{fe} or β_o

f_T : Unit-gain frequency/Bandwidth

Transition frequency

Definition: f_T is frequency at which the current gain of BJT becomes unity (0dB)

f_T is figure of merit for bipolar transistor

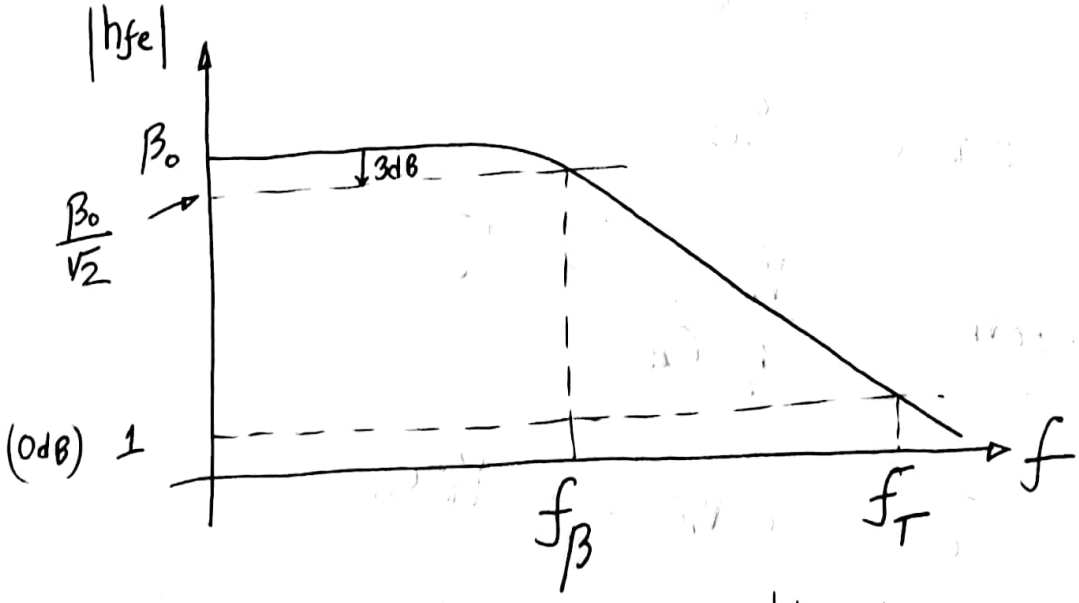

Magnitude plot for |hfe|

Scanned by CamScanner

High-frequency model of BJT (CE configuration)

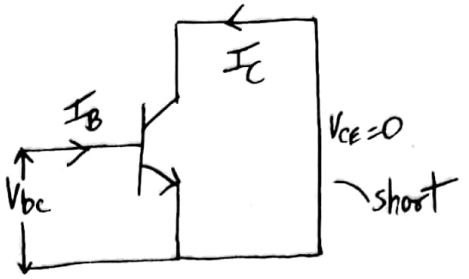

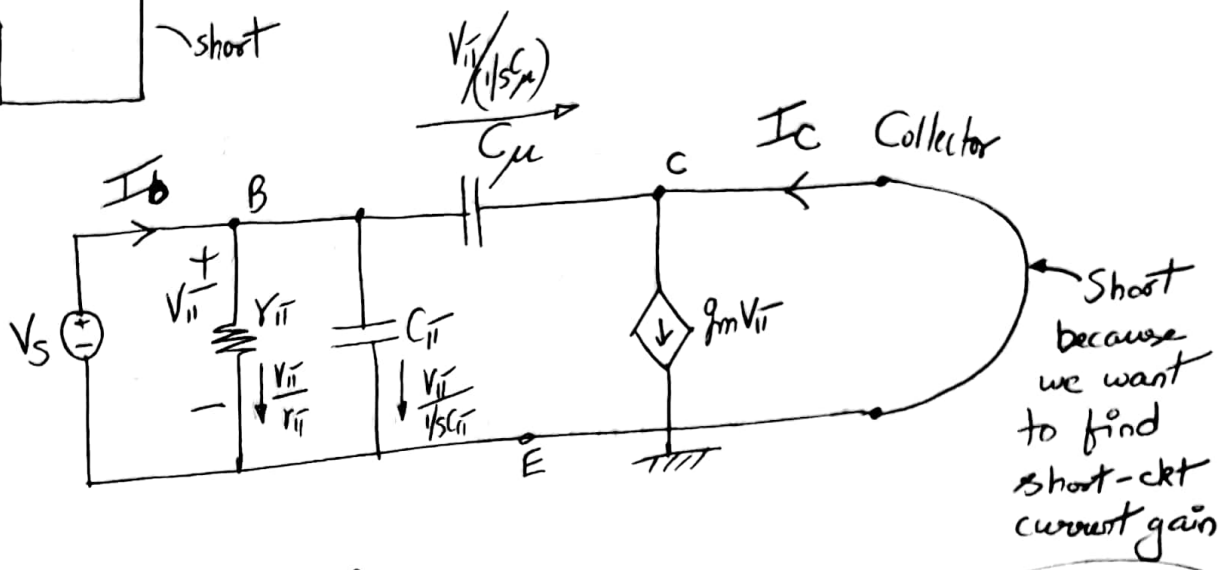

$\frac{1}{sC}$ → impedance of a capacitor

KCL at node B, gives

$$I_b = \frac{V_\pi}{r_\pi} + \frac{V_\pi}{1/sC_\pi} + \frac{V_\pi}{1/sC_\mu}$$

$$\text{ie } I_b = V_\pi \left[\frac{1}{r_\pi} + sC_\pi + sC_\mu \right] \quad — (1)$$

KCL at node C, gives

$$g_m V_\pi = \frac{V_\pi}{1/sC_\mu} + I_C$$

$$I_C = g_m V_\pi - sV_\pi C_\mu$$

$$I_C = (g_m - sC_\mu) V_\pi \quad — (2)$$

Scanned by CamScanner

From ① & ②, we get

$$h_{fe} = \beta = \frac{I_c}{I_b} = \frac{(g_m - sC_\mu)\cancel{V_\pi}}{\cancel{V_\pi}\left[\frac{1}{r_\pi} + sC_\pi + sC_\mu\right]}$$

$$h_{fe} = \frac{g_m - sC_\mu}{\frac{1}{r_\pi} + s(C_\pi + C_\mu)}$$

$s = j\omega$

At the frequencies for which this model is valid,

$$g_m >> \omega C_\mu \rightarrow g_m - sC_\mu \approx g_m$$

(Typical values, $g_m = 50\,\frac{mA}{V}$, $f = 100MHz$, $C_\mu = 0.2pF$

$\omega C_\mu = 2\pi f C_\mu$

$= 0.125 \times 10^{-3}$

$\therefore g_m >> \omega C_\mu$)

$$\therefore h_{fe} = \beta = \frac{g_m}{\frac{1}{r_\pi} + s(C_\pi + C_\mu)}$$

$$h_{fe} = \frac{r_\pi g_m}{1 + s r_\pi (C_\pi + C_\mu)}$$

But $g_m r_\pi = \beta_0 = \beta_{dc}$

Scanned by CamScanner

$$\therefore \boxed{h_{fe} \text{ or } \beta = \frac{\beta_0 \text{ or } \beta_{dc}}{1 + s r_\pi (C_\pi + C_\mu)}}$$

short ckt current gain

where, β_0 is a low-frequency value of β or h_{fe}

Observation:-

1. Current gain of b-jt at high-frequency is a complex quantity ie it will have magnitude & phase

$$h_{fe}(s) = \frac{\beta_0}{1 + s r_\pi (C_\pi + C_\mu)}$$

2. At physical frequency, $s = j\omega$

$$\boxed{h_{fe}(j\omega) = \frac{\beta_0}{1 + j\omega r_\pi (C_\pi + C_\mu)}}$$

Thus, h_{fe} has a single-pole response with a 3dB frequency at $\omega = \omega_\beta$

$$\boxed{\omega_\beta = \frac{1}{r_\pi (C_\pi + C_\mu)}}$$

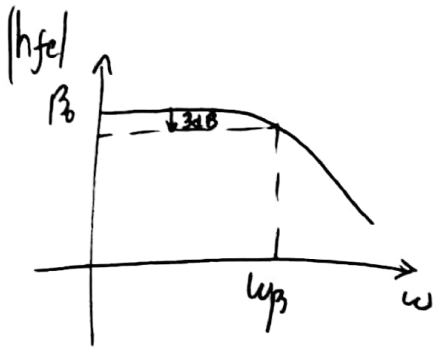

Scanned by CamScanner

3. $$h_{fe}(j2\pi f) = \frac{\beta_0}{1 + j2\pi f r_\pi (C_\pi + C_\mu)}$$

let $$\boxed{f_\beta = \frac{1}{2\pi r_\pi (C_\pi + C_\mu)}}$$ --- Beta cut-off frequency

ie $$h_{fe}(j\omega) = h_{fe}(j2\pi f) = \frac{\beta_0}{1 + j\left(\frac{f}{f_\beta}\right)}$$

4. $$\therefore \boxed{|h_{fe}| = |\beta| = \frac{\beta_0}{\sqrt{1 + (f/f_\beta)^2}}}$$

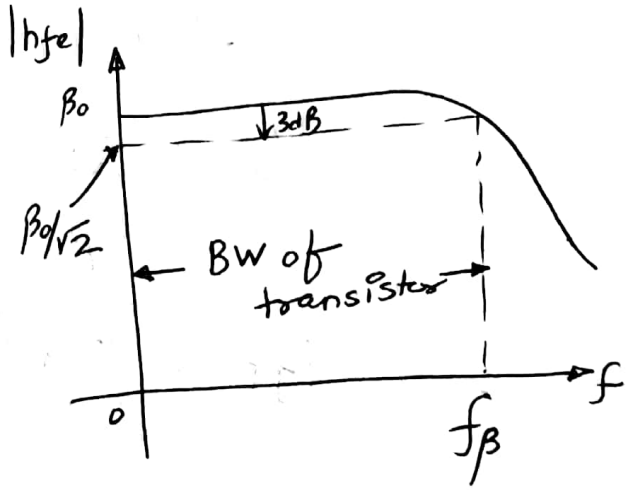

5. In h.f range, as f increases, hfe or β decreases. (This is also one cause why gain of bjt amplifier falls in H.F range (other than shunting by parasitic capacitance)

6. At $f = f_\beta$; $|h_{fe}| = |\beta| = \frac{\beta_0}{\sqrt{2}}$

f_β is frequency at which short-circuit current gain of BJT fall to $\frac{1}{\sqrt{2}}$ times its value at mid-frequency.

Scanned by CamScanner

f_T : transition frequency / unity-gain BW of BJT is the frequency at which current gain (h_{fe}) becomes unity

(In h.f range, as f ↑ses, current gain (h_{fe}) of bjt goes on ↓sing)

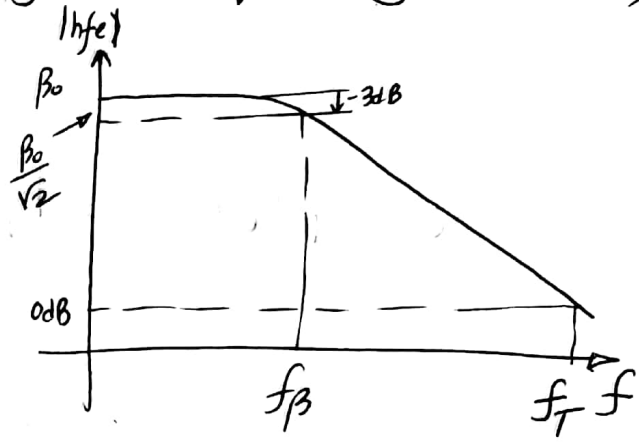

At $f = f_T$; $|h_{fe}| = 1$

ie $|h_{fe}| = \dfrac{\beta_0}{\sqrt{1+(f_T/f_\beta)^2}} = 1$

$|h_{fe}| = \dfrac{\beta_0}{f_T/f_\beta} = 1$ $\quad$ f_T is very large $\left(\because \dfrac{f_T}{f_\beta} >> 1\right)$

$\therefore \beta_0 = \dfrac{f_T}{f_\beta}$

$\therefore \boxed{f_T = \beta_0 \times f_\beta}$ $\quad$ ie f_T = current gain × BW = gain × BW = constant

ie $f_T = \dfrac{\beta_0}{2\pi r_\pi (C_\pi + C_\mu)}$ $\Rightarrow$ $\because \beta_0 = g_m r_\pi$

$$\boxed{f_T = \frac{g_m}{2\pi (C_\pi + C_\mu)}}$$

$f_T \rightarrow$ gain-BW product ; f_β is BW of transistor
→ β_0 current gain of bjt at low freqn.

Scanned by CamScanner

f_β AS FUNCTION OF BIAS CONFIGURATION

The equation $h_{fe} = \dfrac{h_{femid}}{1+j(f/f_\beta)}$ is exactly same as $A_v = \dfrac{1}{1+jf/f_H}$

if we remove multiplying factor hfemid, it indicates that hfe will drop off from its midband value with 20dB/dec slope as shown below. The same fig. has plot of hfb (or α) v/s frequency. Note the small change in hfb for the chosen frequency range, it indicates the CB configuration displays improved high frequency characteristics over common emitter (CE) configuration. This is the reason CB HF parameters rather than CE configuration parameters are often specified for transistors. Specially transistors which are used at HF.

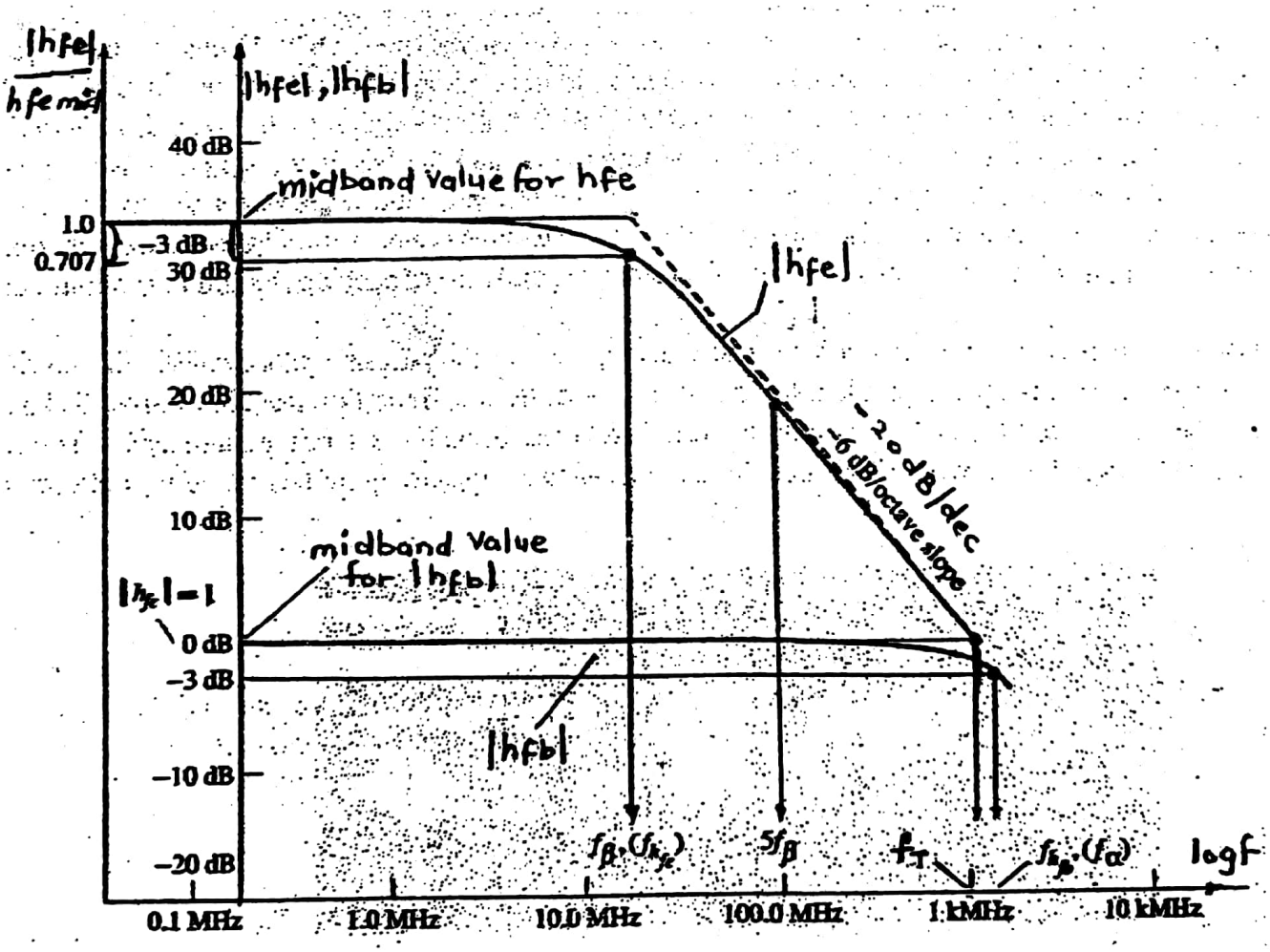

hfe and hfb versus frequency in HF Range.

Scanned by CamScanner

- f_T derivation for a MOSFET :-

f_T : unity-gain frequency/bandwidth of MOSFET

→ transition frequency

→ a figure of merit for high frequency operation of MOSFET

→ Definition: f_T is the frequency at which short circuit current gain of MOSFET becomes unity.

- Is Current gain of MOSFET possible?

So, far we have considered zero gate current for a MOSFET, beoz of v.high resistance betn gate & source terminals

- Yes, since now at extremely high frequencies, input impedance of MOSFET is not infinite.
- It is finite due to presence of parasitic capacitances C_{gs} and C_{gsp}.

∴ At high-frequencies, current gain of MOSFET is defined.

Scanned by CamScanner

High-frequency model for MOSFET is

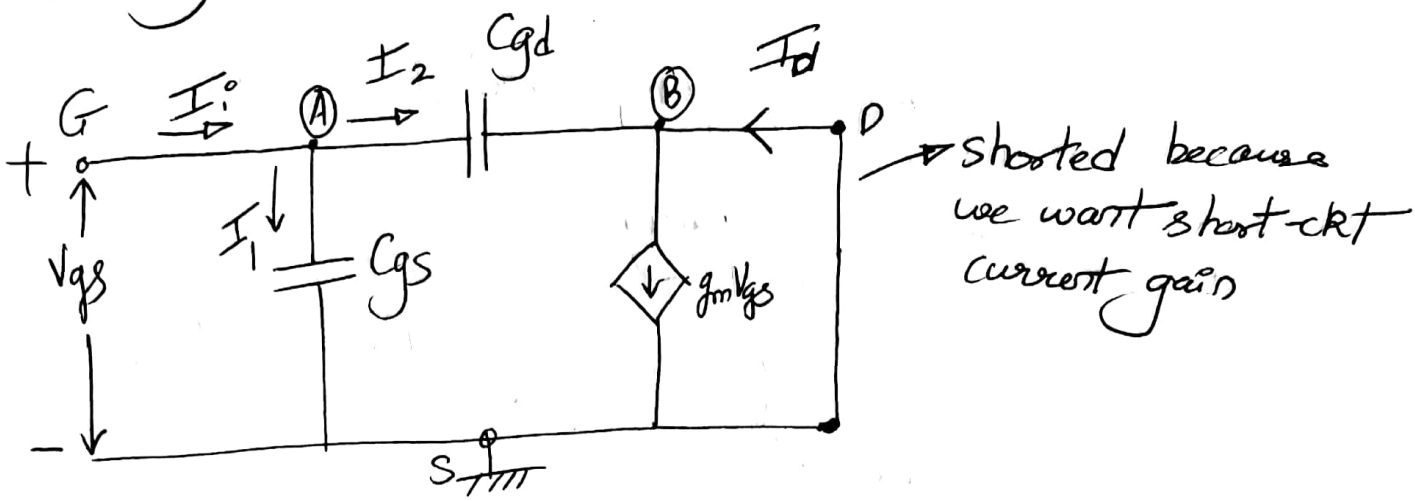

KCL at node (A), gives

$$I_i = I_1 + I_2$$

$$I_i = V_{gs} \times [sC_{gs}] + V_{gs} \times [sC_{gd}]$$

$$I_i = V_{gs}(C_{gs} + C_{gd})s \quad \text{— (1)}$$

KCL at node (B) gives,

$$I_2 + I_d = g_m V_{gs}$$

$$sC_{gd} V_{gs} + I_d = g_m V_{gs}$$

$$V_{gs}[g_m - sC_{gd}] = I_d \quad \text{— (2)}$$

Scanned by CamScanner

Short circuit current gain A_i is

$$A_i = \frac{I_d}{I_i}$$

From ① & ②, we get

$$A_i = \frac{\cancel{V_{gs}}(g_m - sC_{gd})}{s\cancel{V_{gs}}(C_{gs}+C_{gd})} = \frac{g_m - sC_{gd}}{s(C_{gs}+C_{gd})}$$

For physical frequencies, $\boxed{s = j\omega}$

ie $$A_i = \frac{g_m - j\omega C_{gd}}{j\omega[C_{gs}+C_{gd}]}$$

- Recalling that C_{gd} is small at the frequencies of interest

Typical values → $g_m \approx 1\,mA/V$, $C_{gd} = 0.05\,pF$
$f \sim 100\,MHz$ ie $\omega C_{gd} = 2\pi f C_{gd}$
$\approx 0.0314 \times 10^{-3}$

ie $\underline{g_m >> \omega C_{gd}}$

ie $$A_i = \frac{g_m}{j2\pi f(C_{gs}+C_{gd})}$$

$$\therefore |A_i| = \frac{g_m}{2\pi f[C_{gs}+C_{gd}]}$$

Scanned by CamScanner

At $f = f_T$, we have $|A_i| = 1$

ie $$1 = \frac{g_m}{2\pi f_T [C_{gs} + C_{gd}]}$$

ie $$\boxed{f_T = \frac{g_m}{2\pi (C_{gs} + C_{gd})}}$$ --- unity gain bandwidth of a MOSFET

Observations :-

1. f_T is a parameter of the device (MOSFET); usually given in the datasheet
2. f_T does not depend on the circuit
3. Higher f_T means more effective the MOSFET behaves as an amplifier.
4. $f_T \propto g_m$ & $f_T \propto \left(\frac{1}{C_{gs} + C_{gd}}\right)$
5. C_{gs} & C_{gd} Limits the bandwidth
6. Typical value $f_T = 100\,MHz$ (for older technology 5μm CMOS process)

   $f_T = 5 - 10\,GHz$ (for high-speed ckts 0.13μm CMOS process)

Scanned by CamScanner

Q36. BJT ; $I_C = 1mA$, $\beta_0 = 150$, $C_\pi = 4pf$

$C_\mu = 0.5pf$

Missing data in ecad-module01 questions

Find f_β & f_T.

Sol^n:-

$$g_m = \frac{I_C}{V_T} = \frac{1mA}{26mV} = 38.46 \frac{mA}{V}$$

$$f_\beta = \frac{1}{2\pi r_\pi (C_\pi + C_\mu)}$$

$$r_\pi = \frac{\beta V_T}{I_C} = \frac{150 \times 26mV}{1mA} = 3.9K\Omega$$

$$f_\beta = \frac{1}{2\pi \times 3.9K \times (4pf + 0.5pf)}$$

$$\boxed{f_\beta = 9.07 \text{ MHz}}$$

$$f_T = \beta_0 f_\beta$$

$$= 150 \times 9.07 \times 10^6$$

$$\boxed{f_T = 1.36 \text{ GHz}}$$

Scanned by CamScanner

38. NMOS: $K_n = 0.2 \frac{mA}{V^2}$, $V_{TN} = 1V$

$C_{gd} = 0.02pf$, $C_{gs} = 0.25pf$

$I_D = 0.4mA$

Find: f_T

Sol^n:- $g_m = 2K_n(V_{GS} - V_{TN})$ $\qquad I_D = K_n(V_{GS} - V_T)^2$

$g_m = 2\sqrt{I_D K_n}$

$= 2\sqrt{0.4\times10^{-3} \times 0.2\times10^{-3}}$

$g_m = 0.5657 \frac{mA}{V}$

$f_T = \frac{g_m}{2\pi(C_{gd} + C_{gs})}$

$= \frac{0.5657 \times 10^{-3}}{2\pi(0.02pf + 0.25pf)}$

$\boxed{f_T = 333.46 \text{ MHz}}$

Scanned by CamScanner