Need of Multistage amplifiers:

- It has been observed that the voltage gain, R_i and R_o obtained from a single stage amplifier is Limited. Therefore, in order to achieve greater voltage gain, we have to use more than one stage of amplification. Such an amplifier is called a "Multi-stage amplifier."
- The amplifier used in radio and TV Receiver's is usually a multi-stage amplifier.
- Circuit shows a block of single-stage amplifier having gain 'A_v', phase shift between I/P V_i and o/P V_o is $\theta°$.

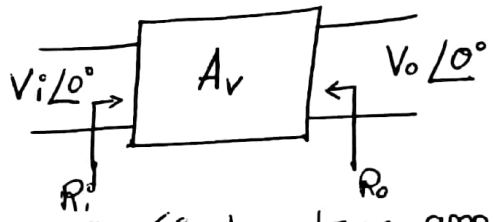

ckt ①: Single-stage amplifier

$R_i \rightarrow$ I/P resistance and $R_o \rightarrow$ o/P resistance.

- The voltage gain A_v, R_i and R_o might not be sufficient for all practical application's.
- Then we use more than one amplifier in cascaded as shown below:

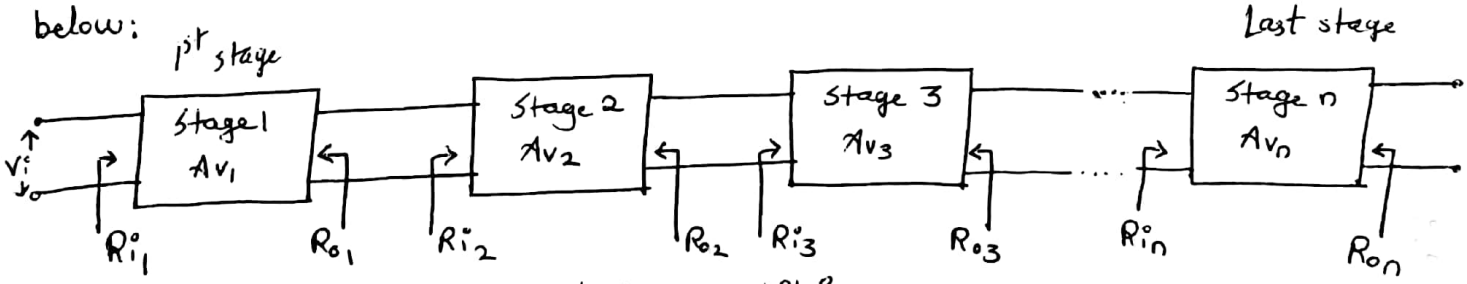

ckt ②: N stage Cascaded amplifier.

- Overall I/P resistance (R_i) of a cascaded configuration → is equal to I/P resistance of 1st stage (R_{i_1}).
- Overall o/P resistance (R_o) of a cascaded configuration → is equal to o/P resistance of Last stage (R_{o_n})

Effect of cascading on gain:-

- In cascaded amplifier's, if amplifiers have individual voltage gain's $A_{v_1}, A_{v_2}, ---A_{v_n}$, then the total gain of cascaded configuration's becomes,

$$\boxed{A_T = A_{v_1} \times A_{v_2} \times A_{v_3} \times ---- A_{v_n}}$$

i.e Overall gain is equal to the product of individual stages.

- If gain of amplifier is given in dB then,

$$\boxed{A_T\,dB = A_1\,dB + A_2\,dB + ---- A_n\,dB}$$

EFFECT OF CASCADING ON LOWER CUTOFF FREQUENCY (f_L)

(a) When more than one amplifiers are cascaded LCF (f_L) of the amplifier increases, and is equal to highest f_L in the cascade chain e.g. If 3 amplifier are connected in cascade with frequency 100 Hz, 30Hz & 20Hz then 100 Hz is the f_L of cascaded stage.

(b) If n number of identical stages are cascaded together i.e. with same f_L then the lower cutoff frequency of cascaded amplifier (f_L) is given as

$$\boxed{f_L' = \frac{f_L}{\sqrt{2^{1/n} - 1}}}$$

where f_L is LCF of individual stage.

Effect of cascading an higher cutoff frequency

a) If more than one different amplifiers are cascaded together then f_H of cascaded amplifier decreases. This is because (as shown),
The output capacitance of first amplifier will become $C_o + C_{wi2} + C_{mi2}$ instead of Co only.
In other words output shunt capacitance will increase.

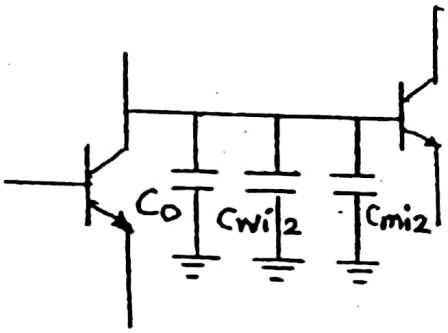

Si.ce $f_H = \frac{1}{2\pi\ R\ C\ shunt}$, f_H will decrease.

b) If n identical stages are cascaded together the new HCF, f_H is given as

$f_H' = f_H\left(\sqrt{2^{1/n} - 1}\right)$ where f_H is HCF of individual stage.

Effect of Cascading on Gain Band Width Product

Gain bandwidth product for an amplifier is defined as the frequency at which gain of amplifier becomes unity (=1) or odB. It is given as $GBW = |Avmid \times f_H|$

Since with cascading f_H decreases GBW also decreases.

effect on bw : Since f_L increases, f_H decreases BW also decreases.

* Coupling Schemes used in multi-stage amplifier:-

. The multistage amplifier need coupling between their individual stages. This coupling serves the following two purpose:

1. It transfers ac o/p of one stage to the I/p of the next stage.
2. It isolates the dc conditions of one stage to the next. It is also necessary to prevent the shifting of Q-points.

→ The coupling network must ensure that both ① and ② conditions are fulfilled, when an ac signal is to be amplified.

* Types of coupled schemes:

. In cascaded amplifier, o/p of one amplifier can be coupled to I/p of next amplifier to get different enhanced parameters like large gain.

. The coupling between the two amplifiers can be with

a) RC coupling

b) Direct coupling.

c) Transformer coupling

1] RC coupling:

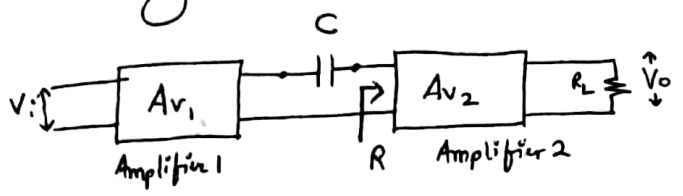

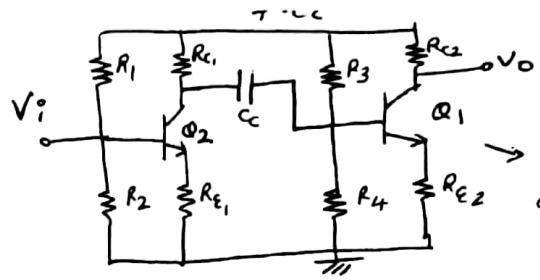

→ RC coupled amplifier

- Amplifier's employing RC coupling scheme are called as "R-C coupled amplifier's."
- In these amplifiers, Capacitor C and I/P resistance of next amplifier forms coupling components.
- It is the most common coupling scheme for multi-stage amplifier's.

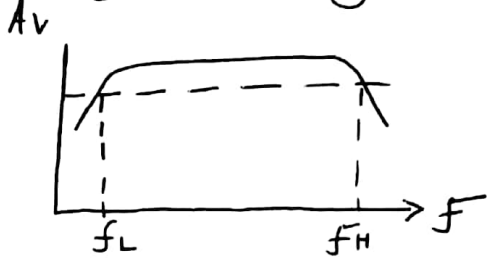

Advantages:

- It offer's wide frequency response ie large bandwidth.
- Due to capacitive coupling, the dc biasing of individual stages will remain unchanged even after cascading. (ie due to coupling capacitors, the dc voltage's and current's will not be coupled from one stage to another).

Disadvantages:

- Gain reduces at low frequencies due to coupling capacitor's.
- Overall voltage gain is less.

Applications:

RC coupled amplifiers are used in the following application's.

- In public address (PA) amplifier systems.
- Tape recorder's, TV, VCR and CD players.
- In stereo amplifier's.

Note: RC coupled amplifier's are basically voltage amplifier's.

2] Direct Coupling:

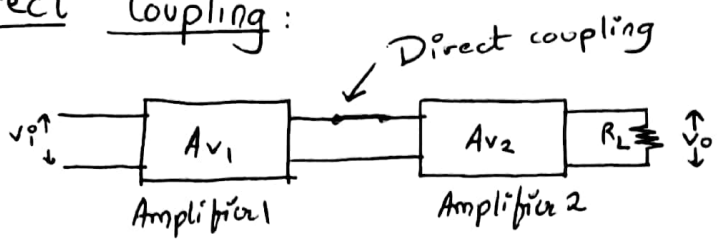

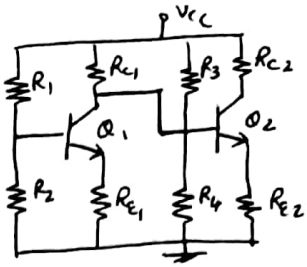

Direct coupled (DC) amplifier.

- Amplifiers employing direct coupling scheme are called as "direct coupled amplifier or dc amplifier's".

Advantages:

- This type of coupling is used where Low-frequency signal's are to be amplified.
- That means, DC amplifier's can be used to amplify DC and very low frequency also with ac signals.

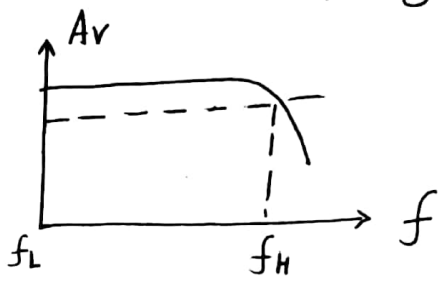

- Since capacitor's are absent, DC amplifier's are most suitable for Integrated circuit's. Because it is difficult to make capacitors in integrated circuits.
- Negative feedback can easily be applied which ↑ses the stability of amplifier.

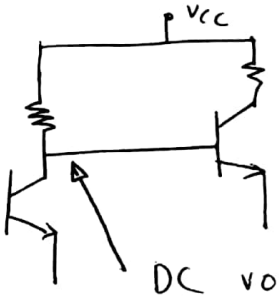

DC voltage at o/p of 1st amplifier.

Disadvantages:

- In DC amplifier's, dc o/p voltage of previous amplifier disturb the DC biasing condition's of next amplifier.
- Due to above problem, Q point of the next stage might shifts towards saturation or cut-off.
- In DC amplifier, there is drift in Q point also due to thermal condition's (ie temperature variation's).

Note: As temperature varies I_{CBO}, I_{CEO} (ie leakage currents), I_{CQ} of the amplifier changes.

Please note that, so far we have done only Mid-band analysis of various amplifier's (BJT, FET, MOSFET amplifier's)

- Mid-band analysis mean's, ac analysis wherein the gain of the amplifier is almost constant.

- But in reality, we also have low-frequency and high frequency analysis also for an amplifier.

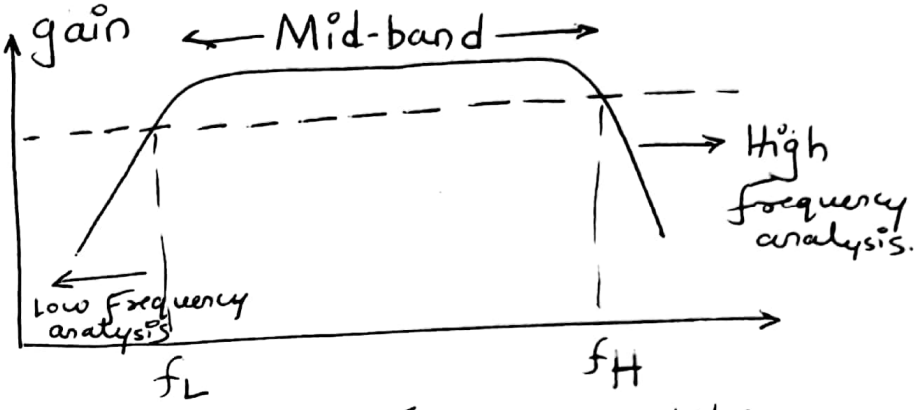

- That is we have following analysis for any amplifier
  1] DC Analysis
  2] Mid-band Analysis
  3] Low-frequency Analysis
  4) High-frequency Analysis.

Gain x Bandwith Produc
= 1

- Types of Multi-stage amplifier's:-
  1] CE-CE (BJT-BJT)
  2] CS-CS (FET-FET)
  3] CS-CE (FET-BJT)
  4] CE-CB] Cascode amplifier's.
  5) CS-CG]

Next Topic: Analysis of RC Coupled Multistage Amplifier's

• Analysis of CE-CE RC coupled cascade amplifier :-

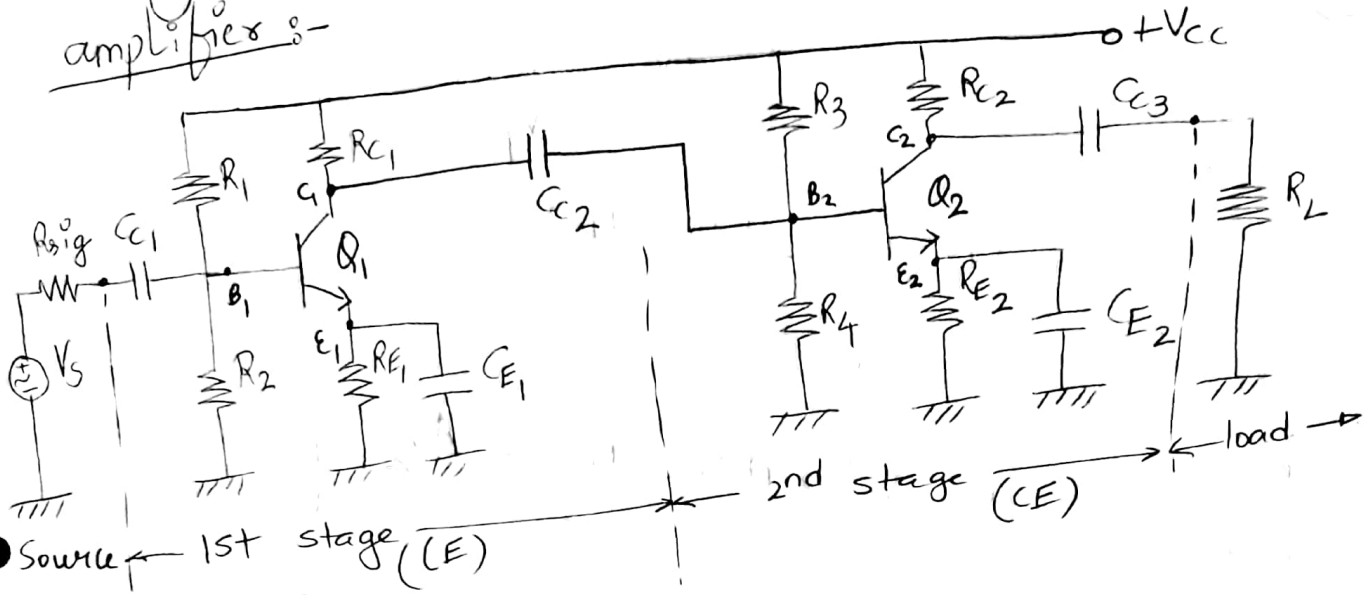

(Mid-frequency)

A] Mid-band AC equivalent circuit

$C_{c_1}, C_{c_2}, C_{c_3}, C_{E_1}, C_{E_2}$ ⇒ behaves as s.c