Analysis of CS-CE two-stage RC-coupled cascade amplifier :-

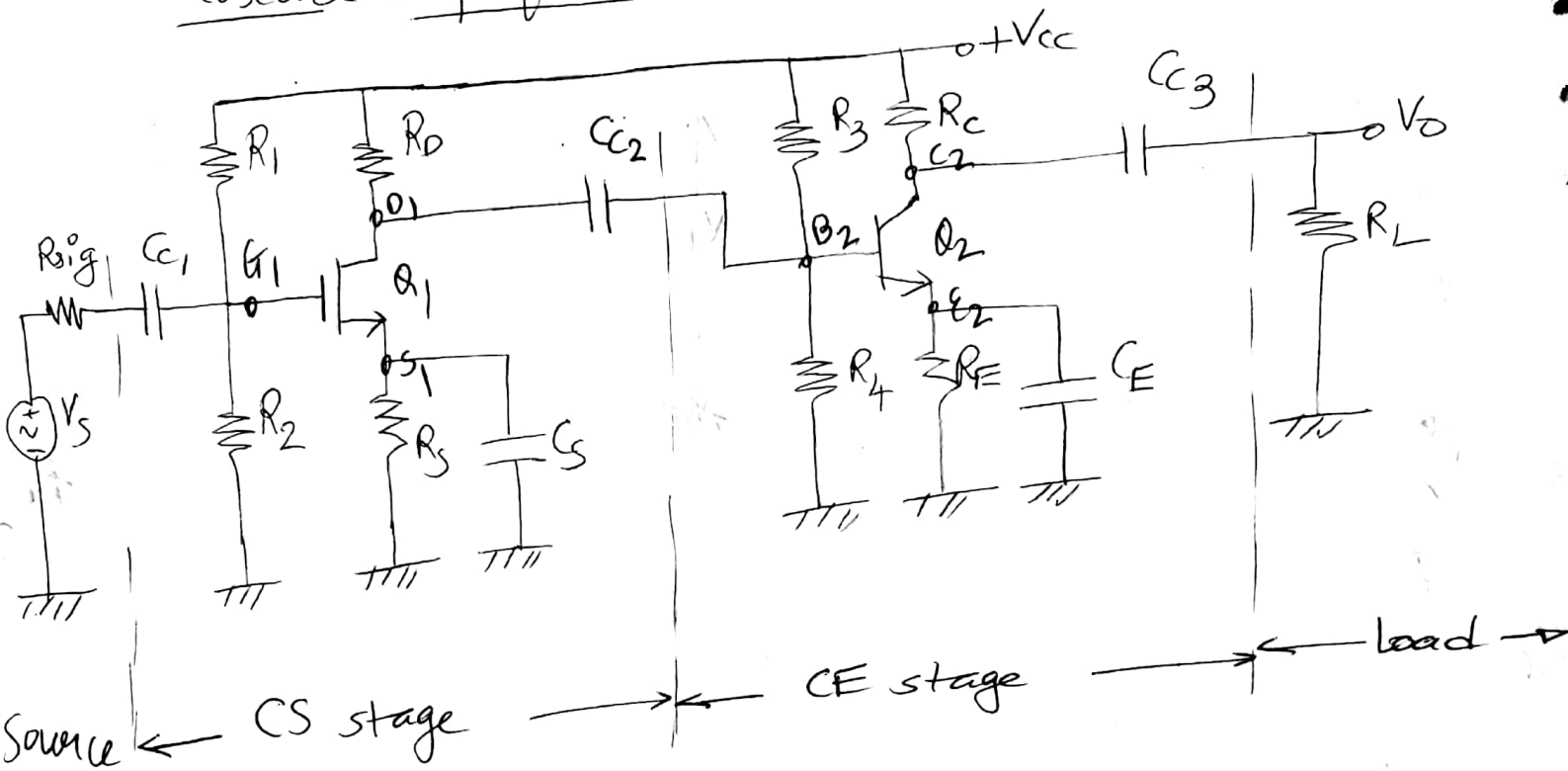

- CS stage is connected first, because of very high input impedance of CS amplifier, it avoids loading of source by the amplifier.
- CS stage works as buffer with low gain.
- Most of the voltage gain is provided by CE stage.

INDERJIT SINGH

Scanned by CamScanner

Mid-frequency AC equivalent circuit:-

→ short all external capacitors & independent DC source V_{CE}

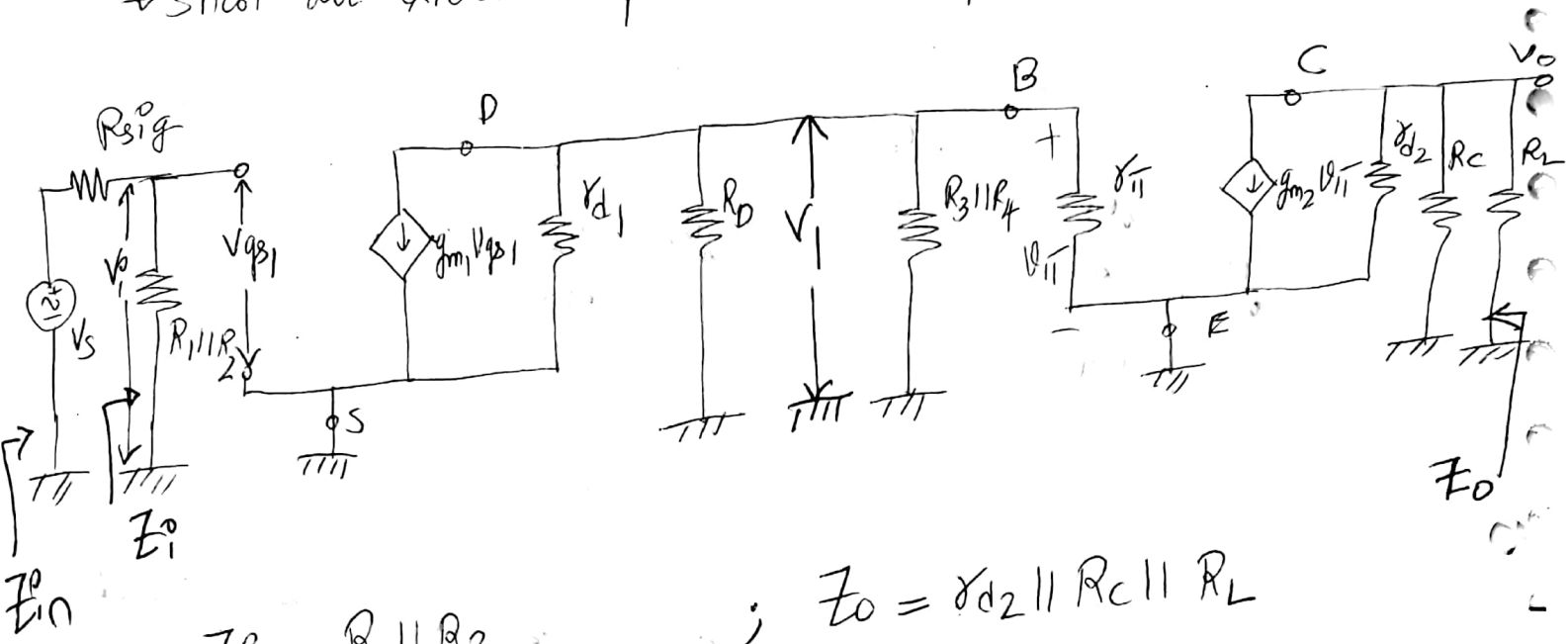

$Z_i = R_1 \| R_2$; $Z_o = r_{d2} \| R_C \| R_L$

$Z_{in} = R_{sig} + Z_i$

$A_{v1} = \frac{V_1}{V_i}$; $A_{vT} = A_{v1} A_{v2}$

→ $A_{v2} = \frac{V_o}{V_1}$;

→ $\frac{V_o}{V_1} = \frac{-g_{m2} V_\pi (r_{d2} \| R_C \| R_L)}{V_\pi} = -g_{m2}(Z_o)$

$$\boxed{A_{v2} = -g_{m2}(r_{d2} \| R_C \| R_L)}$$

→ $\frac{V_1}{V_i} = \frac{-g_{m1} V_{gs1} (r_{d1} \| R_D \| R_3 \| R_4 \| r_\pi)}{V_{gs1}}$

$$\boxed{A_{v1} = -g_{m1}(r_{d1} \| R_D \| R_3 \| R_4 \| r_\pi)}$$

INDERJIT SINGH

INDERJIT SINGH

Scanned by CamScanner

$$A_{V_T} = A_{V_1} A_{V_2}$$

$$A_{V_{TS}} = \frac{V_O}{V_S} = \underbrace{\frac{V_O}{V_1}}_{A_{V_2}} \underbrace{\frac{V_1}{V_i^o}}_{A_{V_1}} \frac{V_i^o}{V_S}$$

$$\frac{V_i^o}{V_S} = \left(\frac{Z_i^o}{Z_i^o + R_{sig}^o} \right)$$

$$\boxed{A_{V_{TS}} = A_{V_T} \left(\frac{Z_i^o}{Z_i^o + R_{sig}^o} \right)}$$

overall mid-band voltage gain

Scanned by CamScanner

16. A two stage RC coupled circuit is shown in Figure 3. JFET parameters are $I_{DSS} = 7mA$, $V_P = -2.5V$ & $r_d = 50k\Omega$ and BJT parameters are $\beta = 220$, $V_{BE} = 0.7V$ [10]

a) Calculate input impedance of the circuit

b) Calculate output impedance of the circuit

c) Calculate output voltage for the circuit

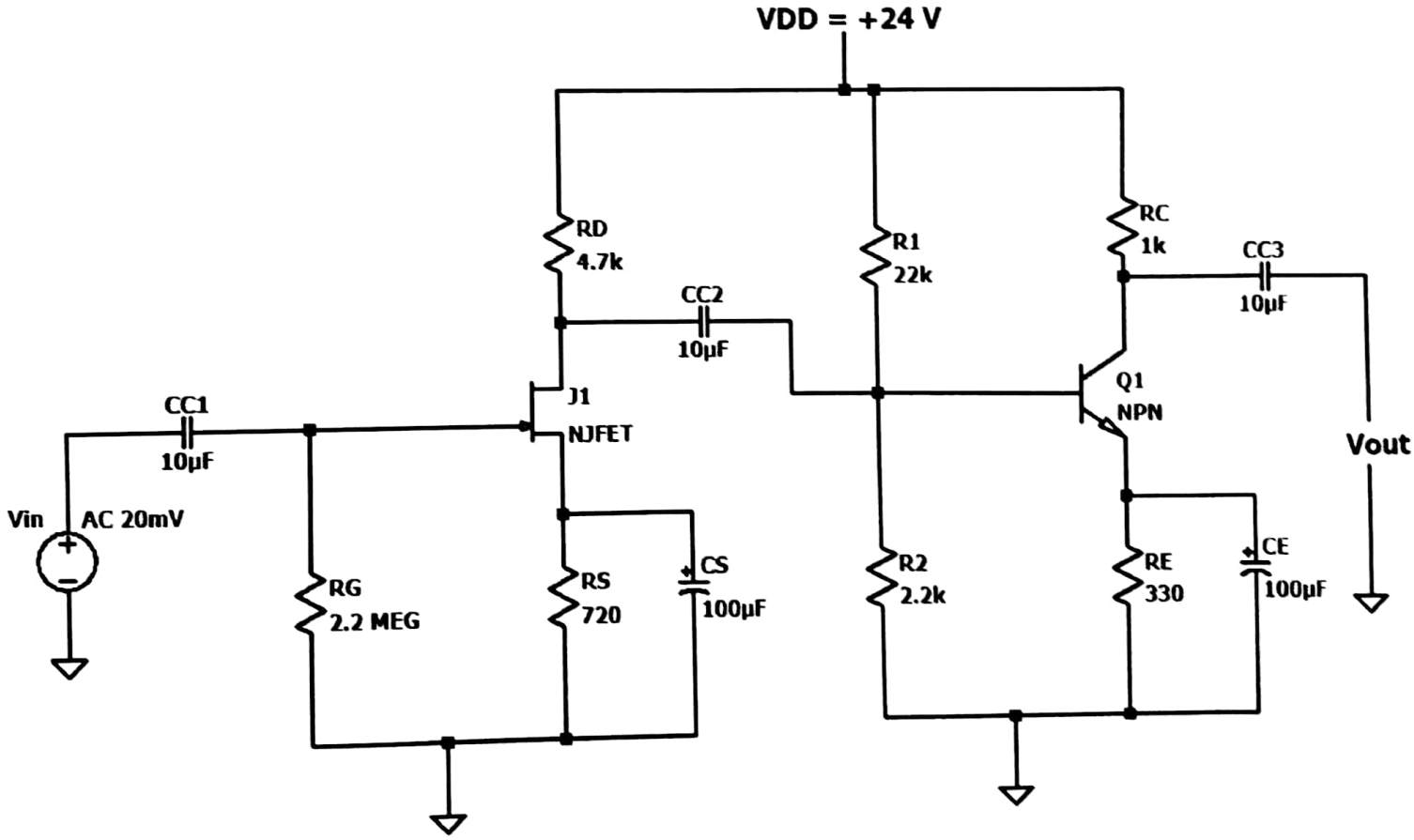

Figure 3: Question 16

Answers: $I_{DQ} = 1.74mA$ $V_{GSQ} = -1.253V$ $g_{m1} = 2.793mA/V$ $I_{BQ} = 19.75\mu A$
$I_{CQ} = 4.345mA$ $g_{m2} = 167.11mA/V$ $r_\pi = 1.32k\Omega$ $Z_i = 2.2M\Omega$ $Z_o = 1k\Omega$
$A_{V1} = -1.874$ $A_{V2} = -167.11$ $A_{VT} = 313.16$ $V_{out} = 6.263V$

Scanned by CamScanner

Soln:- Since RC coupling is employed, DC analysis of both stages can be performed individually.

a) DC Analysis (JFET)

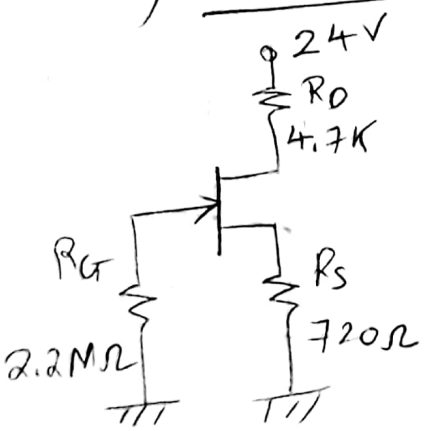

$V_{GS} = V_G - V_S$

$V_{GS} = 0 - I_D R_S = 0 - I_D(720) = -720 I_D$ — (1)

$I_D = I_{DSS}\left(1 - \frac{V_{GS}}{V_P}\right)^2 = 7\times10^{-3}\left(1 + \frac{V_{GS}}{2.5}\right)^2$ — (2)

Put (2) in (1), we get

$\rightarrow V_{GS} = -720 \times 7\times10^{-3}\left(1 + \frac{V_{GS}}{2.5}\right)^2$

$\rightarrow V_{GS} = -5.04\left(1 + 0.8 V_{GS} + 0.16 V_{GS}^2\right)$

$\rightarrow V_{GS} = -5.04 - 4.032 V_{GS} - 0.8064 V_{GS}^2$

Scanned by CamScanner

ie $0.8064 V_{GS}^2 + 5.032 V_{GS} + 5.04 = 0$

$$V_{GSQ} = -1.2533\,V \quad \text{or} \quad -4.98\,V$$

$(V_{GSQ} > V_P)$

ie $I_{DQ} = I_{DSS}\left(1 - \frac{V_{GS}}{V_P}\right)^2 = 7\times10^{-3}\left(1 - \frac{(-1.2533)}{(-2.5)}\right)^2$

$$I_{DQ} = 1.74\ mA$$

Small-signal parameter:- (JFET)

$r_d = 50K\Omega$ --- given

$$g_{m_1} = \frac{2I_{DSS}}{|V_P|}\left(1 - \frac{V_{GSQ}}{V_P}\right) = \frac{2\times7\times10^{-3}}{2.5}\left[1 - \frac{(-1.2533)}{(-2.5)}\right]$$

$$g_{m_1} = 2.793\ \frac{mA}{V}$$

b) DC Analysis of BJT:-

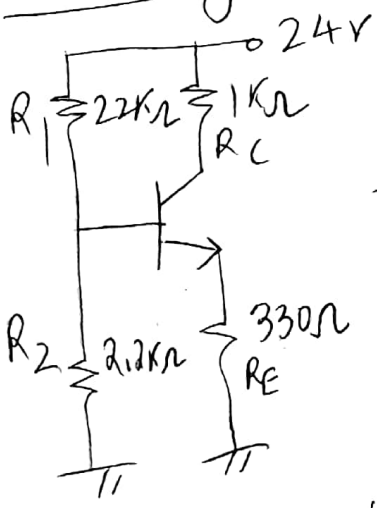

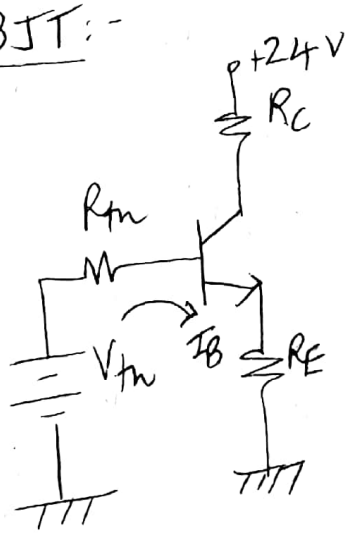

$$V_{th} = \frac{R_2}{R_1+R_2}\times 24 = \frac{2.2K}{2.2K+22K}\times 24 = 2.18\ V$$

$$R_{th} = R_1 \| R_2 = 22K \| 2.2K = 2K\Omega$$

$$\rightarrow I_{BQ} = \frac{V_{th} - V_{BE}}{R_{th} + (1+\beta)R_E} = \frac{2.18 - 0.7}{2K\Omega + 221\times 330} = 19.75\,\mu A$$

$$\rightarrow I_{CQ} = \beta I_{BQ} = 220\times 19.75\,\mu A = 4.345\ mA$$

Scanned by CamScanner

→ Small-sig BJT parameter:-

$$g_{m2} = \frac{I_{CQ}}{V_T} = \frac{4.345mA}{26mV} = \underline{167.11 \ \frac{mA}{V}}$$

$$r_\pi = \frac{\beta V_T}{I_{CQ}} = \frac{220 \times 26mV}{4.345mA} = \underline{1.32K\Omega}$$

c] Mid-frequency AC equivalent circuit :-

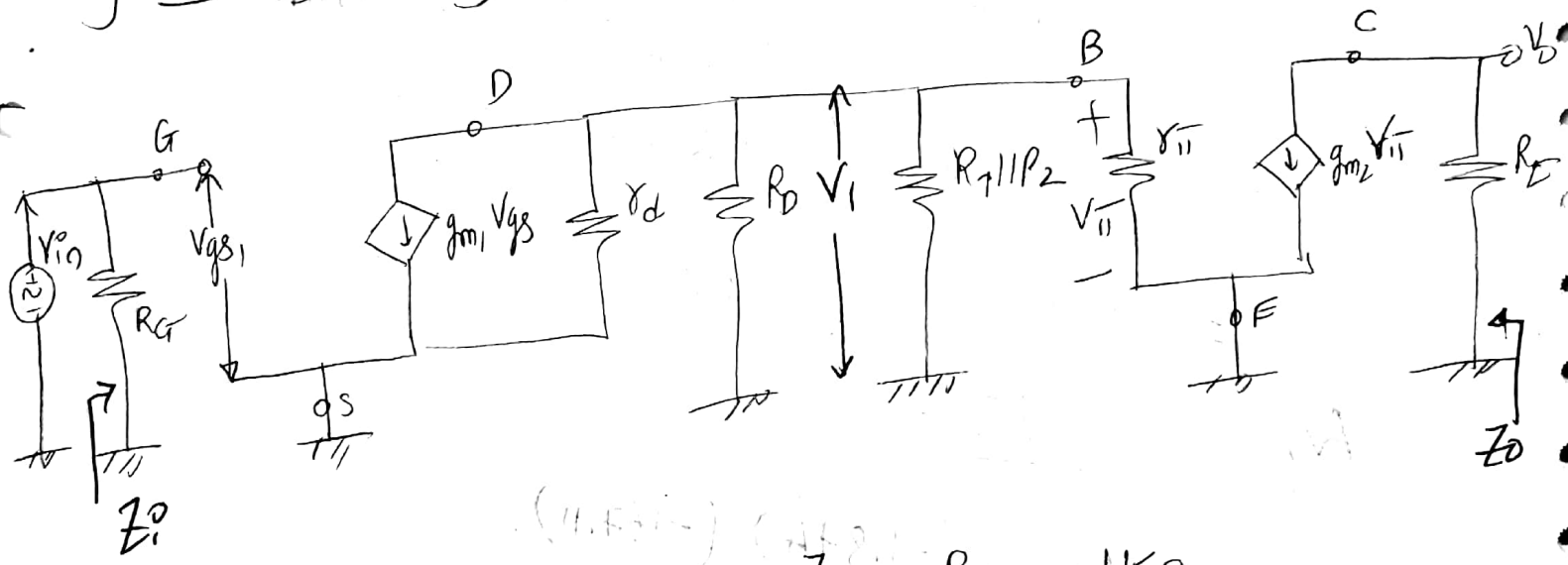

$Z_i = R_G = \underline{2.2M\Omega}$; $Z_o = R_C = \underline{1K\Omega}$

$A_{v_1} = \frac{V_1}{V_{in}}$; $A_{v_2} = \frac{V_o}{V_1}$; $A_{v_T} = A_{v_1} A_{v_2}$

$$\frac{V_o}{V_1} = \frac{-(g_{m_2} V_\pi) R_C}{V_\pi} = \underline{-g_{m_2} R_C} = -167.11 \times 10^{-3} \times 1K\Omega$$

$$A_{v_2} = \underline{-167.11}$$

DERJIT SINGH

Scanned by CamScanner

$$A_{v_1} = \frac{V_1}{V_{in}^{o}}$$

$$\rightarrow \frac{V_1}{V_{in}^{o}} = \frac{-g_{m_1} \cancel{V_{gs}} \left(r_d \,||\, R_D \,||\, R_1 \,||\, R_2 \,||\, r_\pi\right)}{\cancel{V_{gs}}}$$

$$A_{v_1} = -g_{m_1} \left(r_d \,||\, R_D \,||\, \overbrace{R_1 \,||\, R_2}^{2K\Omega} \,||\, r_\pi\right)$$

$$= -2.793\times10^{-3} \left(\underbrace{50K \,||\, 4.7K\Omega}_{4.296K} \,||\, \underbrace{2K\Omega \,||\, 1.32K\Omega}_{795.18}\right)$$

$$= -2.793\times10^{-3} \left(4.296K \,||\, 795.18\right)$$

$$= -2.793\times10^{-3} \left(670.98\right)$$

$$A_{v_1} = \underline{-1.874}$$

$$A_{v_T} = A_{v_1} A_{v_2} = (-1.874)(-167.11)$$

$$A_{v_T} = \underline{313.16}$$

Also, $A_{v_T} = \frac{V_o}{V_{in}^{o}}$

$$\rightarrow V_o = A_{v_T} \times V_{in}^{o} = 313.16 \times 20mV = \underline{6.263V}$$

ie $\underline{V_o = 6.263V}$ for $V_{in}^{o} = 20mV$

Scanned by CamScanner

9. A two stage circuit is shown in figure 14, MOSFET parameters are $V_{TN1} = V_{TN2} = 5V$, [10]
$k_{n1} = k_{n2} = 0.12mA/V^2$, & $\lambda_1 = \lambda_2 = 0$ [IA]

a) Determine the Q point for both stages

b) Draw mid-frequency equivalent circuit

c) Calculate A_{V1} and A_{V2}

d) Calculate A_{VT} in dB

e) Calculate V_{out} if $V_s = 20mV$

f) Calculate Z_i and Z_o

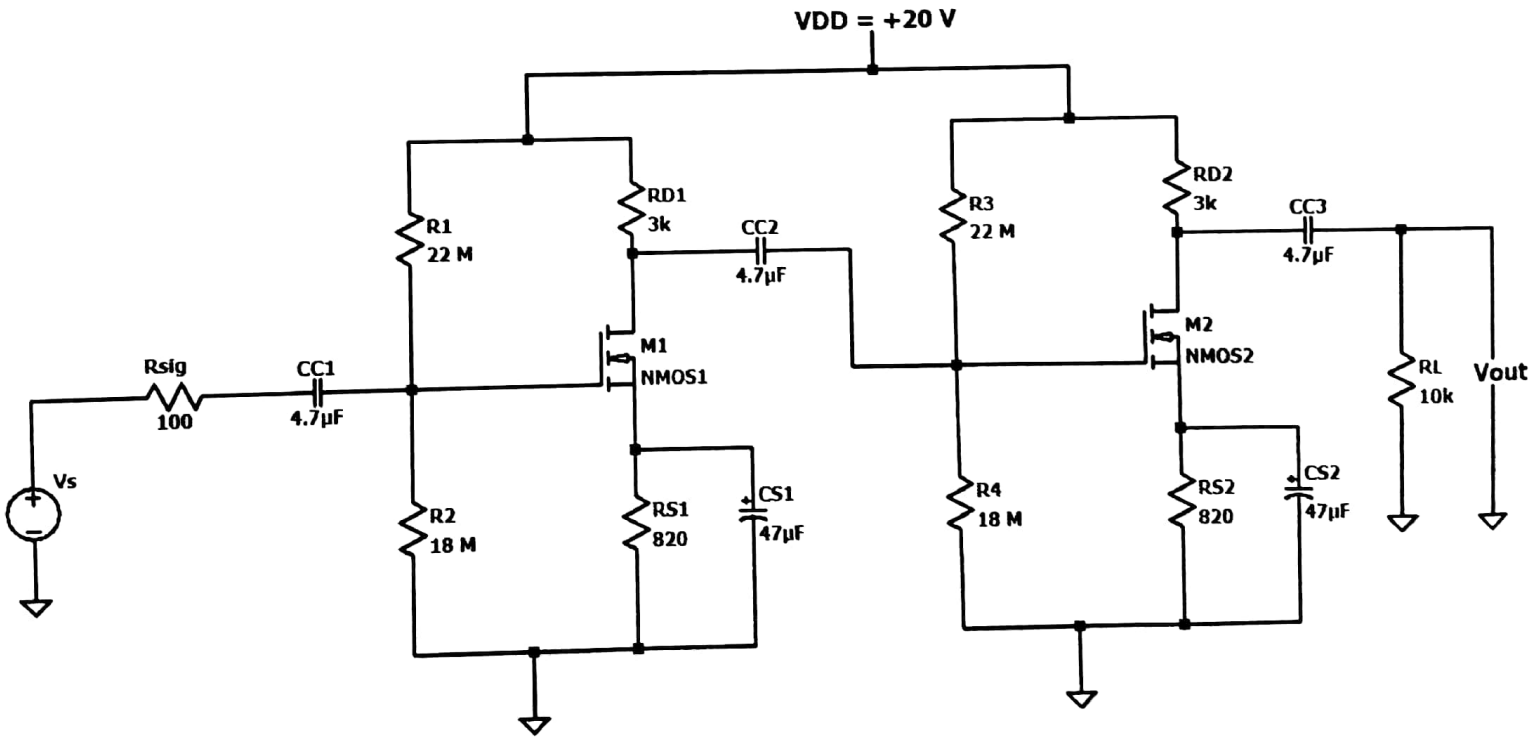

Figure 14: Question 9

Scanned by CamScanner

Q9. Module 2 : Previous years Exam questions 29/1/2020

Given: CS-CS cascade amplr

$V_{TN_1} = V_{TN_2} = 5V$

$K_{n_1} = K_{n_2} = 0.12 \frac{mA}{V^2}$

$\lambda_1 = \lambda_2 = 0$

$V_{DD} = 20V$

To find i) Qpt for both stages

ii) A_{v_1} & A_{v_2}

iii) A_{vT} in dB

iv) V_{out} if $V_s = 20mV$

v) Z_i & Z_o

Soln:- a) Since both stages of given amplifier are symmetric, dc analysis of single-stage is sufficient.

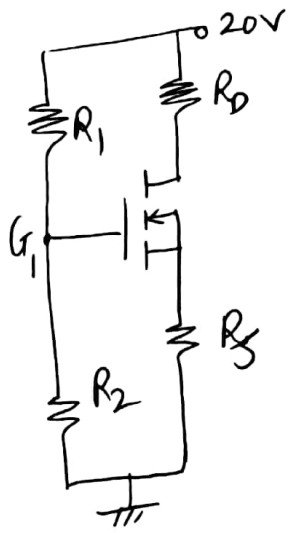

$$V_G = \frac{R_2}{R_1+R_2} \times V_{DD} = \frac{18}{18+22} \times 20$$

$$V_G = 9V$$

$$\rightarrow V_S = I_D R_S$$

$$\rightarrow V_{GS} = V_G - I_D R_S$$

$$V_{GS} = 9 - I_D(820) \quad -(1)$$

Now, assuming the MOSFET is working in saturation mode,

$$I_D = K_n (V_{GS} - V_{TN})^2$$

$$I_D = 0.12 \times 10^{-3} (V_{GS} - 5)^2 \quad -(2)$$

Scanned by CamScanner

Put ② in ①, we get

$$V_{GS} = 9 - 820 \times 0.12 \times 10^{-3} (V_{GS}^2 - 10V_{GS} + 25)$$

$$V_{GS} = 9 - 0.0984 (V_{GS}^2 - 10V_{GS} + 25)$$

$$V_{GS} = 9 - 0.0984 V_{GS}^2 + 0.984 V_{GS} - 2.46$$

$$\rightarrow 0.0984 V_{GS}^2 + 0.016 V_{GS} - 6.54 = 0$$

$$V_{GS} = 8.07 \text{ V} \quad \text{or} \quad -8.234 \times$$

$$\checkmark (V_{GS} > V_{TN})$$

$$\rightarrow I_D = 0.12 \times 10^{-3} (8.07 - 5)^2$$

$$I_D = 1.13 \text{ mA}$$

Q point

$$\therefore \boxed{V_{GS_1} = 8.07 \text{V} = V_{GS_2}} \; ; \; \boxed{I_{D_1} = I_{D_2} = 1.13 \text{ mA}}$$

b) Small-signal model parameters:-

$$g_m = 2K_n (V_{GS} - V_{TN})$$

$$= 2 \times 0.12 \times 10^{-3} (8.07 - 5)$$

$$g_m = 0.7368 \frac{\text{mA}}{\text{V}}$$

$$\therefore \boxed{g_{m_1} = g_{m_2} = 0.7368 \frac{\text{mA}}{\text{V}}}$$

Scanned by CamScanner

c) Mid-frequency equivalent circuit :-

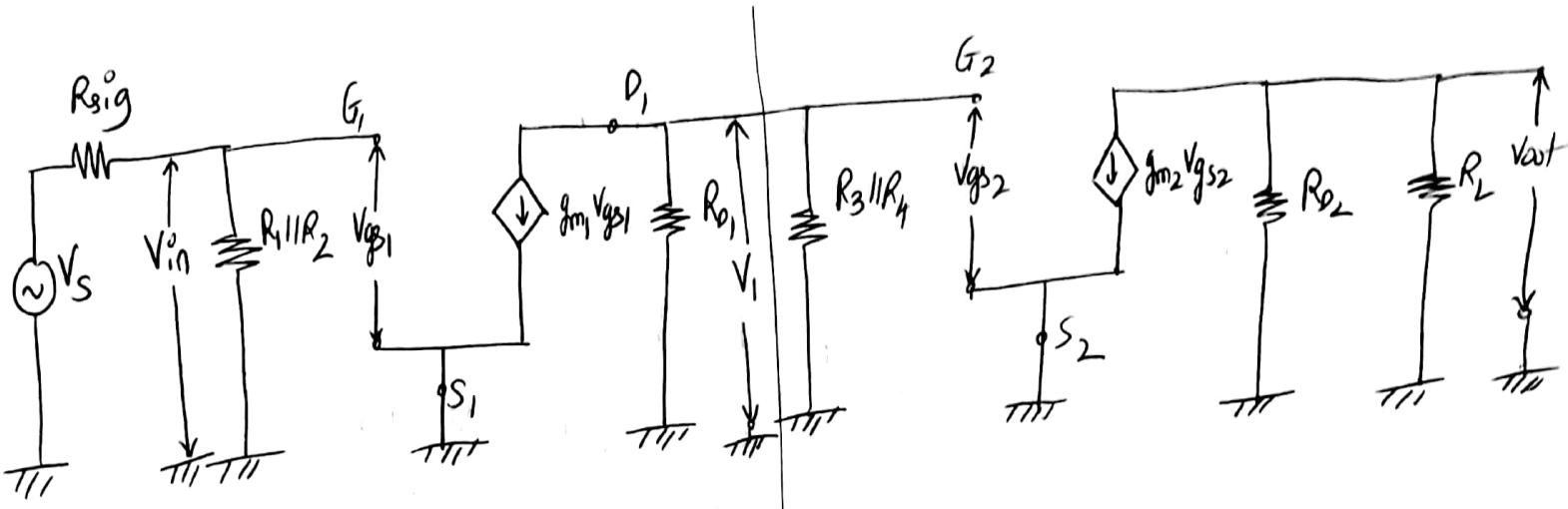

$$A_{v_{mid}} = \frac{V_{out}}{V_s} = \underbrace{\left(\frac{V_{out}}{V_1}\right)}_{A_{v_2}} \underbrace{\left(\frac{V_1}{V_{in}}\right)}_{A_{v_1}} \left(\frac{V_{in}}{V_s}\right)$$

→ Gain of 2nd stage $A_{v_2} = \frac{V_{out}}{V_1}$

$$\therefore \frac{V_{out}}{V_1} = \frac{-(g_{m_2} V_{gs_2})(R_{D_2} \| R_L)}{V_{gs_2}}$$

$$A_{v_2} = -g_{m_2}(R_{D_2} \| R_L)$$

$$= -0.7368 \times 10^{-3} (3K \| 10K)$$

$$= -0.7368 \times 10^{-3} (2.307K)$$

$$\boxed{A_{v_2} = -1.7}$$

Scanned by CamScanner

Gain of 1st stage: $A_{v_1} = \frac{V_1}{V_{in}}$

$$\frac{V_1}{V_{in}} = \frac{-(g_{m_1} V_{gs_1})\ (R_{D_1} \parallel R_3 \parallel R_4)}{V_{gs_1}}$$

$$= -g_{m_1}\left[R_{D_1} \parallel R_3 \parallel R_4\right]$$

$$= -0.7368 \times 10^{-3}\left[3K \parallel \underbrace{22M \parallel 18M}_{9.9M}\right]$$

$$= -0.7368 \times 10^{-3}\ (2.999K)$$

$$\boxed{A_{v_1} = -2.209}$$

- $$\frac{V_{in}}{V_s} = \frac{R_1 \parallel R_2}{R_1 \parallel R_2 + R_{sig}} = \frac{(22M \parallel 18M)}{(22M \parallel 18M) + 100}$$

$$= \frac{9.9M}{9.9M + 100} \approx 0.9999 \approx 1$$

$$\therefore\ A_{vmid} = A_{v_1} A_{v_2} \times \left(\frac{V_{in}}{V_s}\right)$$

$$= (-1.7) \times (-2.209) \times (1)$$

$$\boxed{A_{vmid} = 3.7553}$$

$$\therefore\ A_{vmid_{dB}} = 20\log_{10}(3.7553) = \underline{11.49\ dB}$$

Scanned by CamScanner

- $\frac{V_{out}}{V_S} = A_{vmid} = -3.7553$; $V_S = 20mV$

$\therefore V_{out} = -3.7553 \times 20mV$

$\boxed{V_{out} = -75.1\ mV}$

- Input impedance:

$Z_i = R_1 \| R_2 = 22M \| 18M = \underline{9.9M\Omega}$

$Z_{is} = R_{sig} + Z_i = \underline{9.9001\ M\Omega}$

- Output impedance:

$Z_o = R_{D_2} \| R_L$

$= 3K \| 10K$

$Z_o = \underline{2.307K\Omega}$

Scanned by CamScanner