- Cascode amplifier (CS-CG directly coupled amplifier):

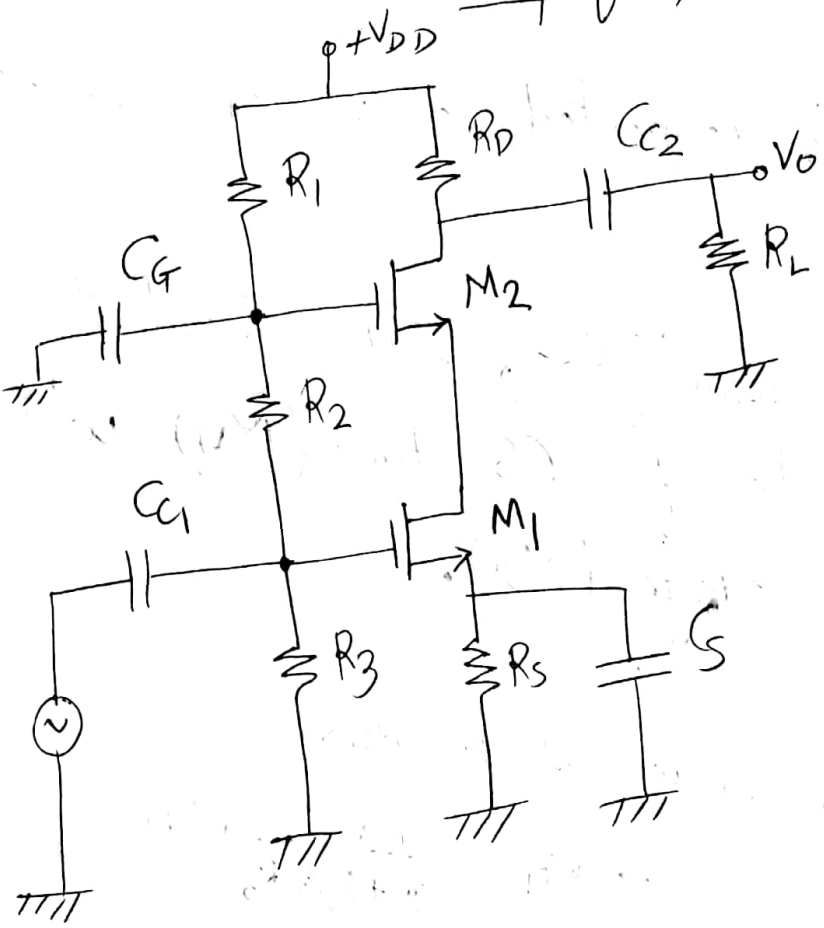

OR

Direct coupling

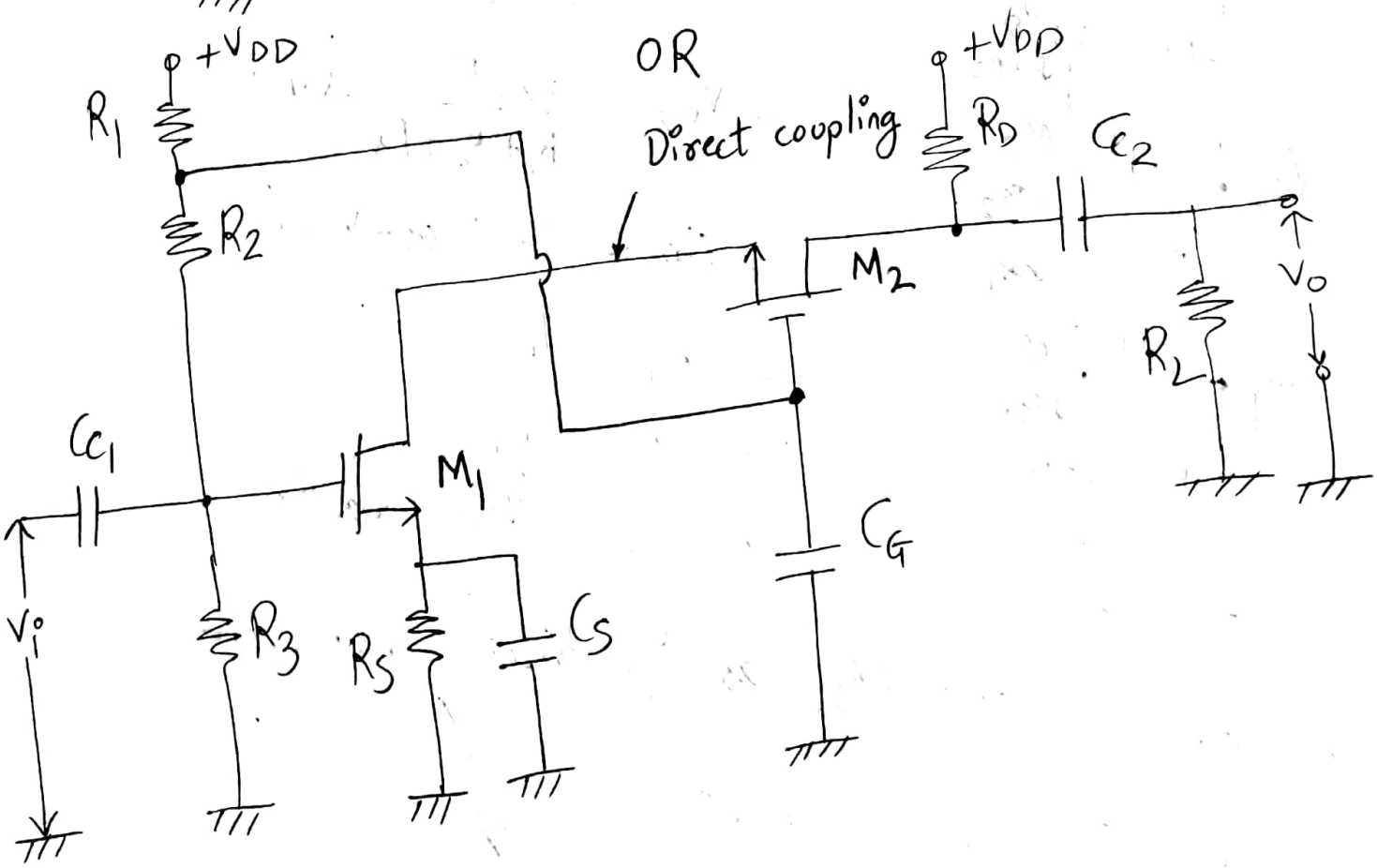

Scanned by CamScanner

- Transistor M_1 is connected in a common-source configuration.
- Transistor M_2 is connected in a common-gate configuration.
- In a cascode amplifier, I/p signal V_i is connected to gate of CS stage (M_1) which drives a CG stage (M_2).

→ <u>DC Analysis</u>: (open circuit all capacitors)

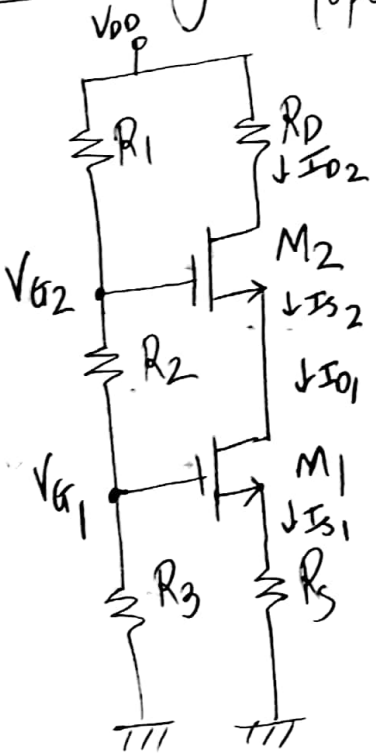

→ $V_{G_1} = \frac{R_3}{R_1+R_2+R_3} \times V_{DD}$

→ $V_{G_2} = \frac{R_2+R_3}{R_1+R_2+R_3} \times V_{DD}$

→ $I_D = K_n (V_{GS} - V_{TN})^2$

→ $V_{S_1} = I_{DQ} R_S$

→ $V_{S_2} = V_{D_1}$

→ $V_{D_2} = V_{DD} - I_{DQ} R_D$

→ Consider M_1 and M_2 as <u>identical transistors.</u>

→ Assume <u>$I_{D_1} \approx I_{D_2} \approx I_{S_1} \approx I_{S_2}$</u>

$$\boxed{\begin{aligned} V_{TN_1} &= V_{TN_2} = V_{TN} \\ V_{GS_1} &= V_{GS_2} = V_{GS} \end{aligned}}$$

Scanned by CamScanner

- AC (mid-band) equivalent circuit:

(all capacitors act as s.c, $V_{DD} \sim$ s.c)

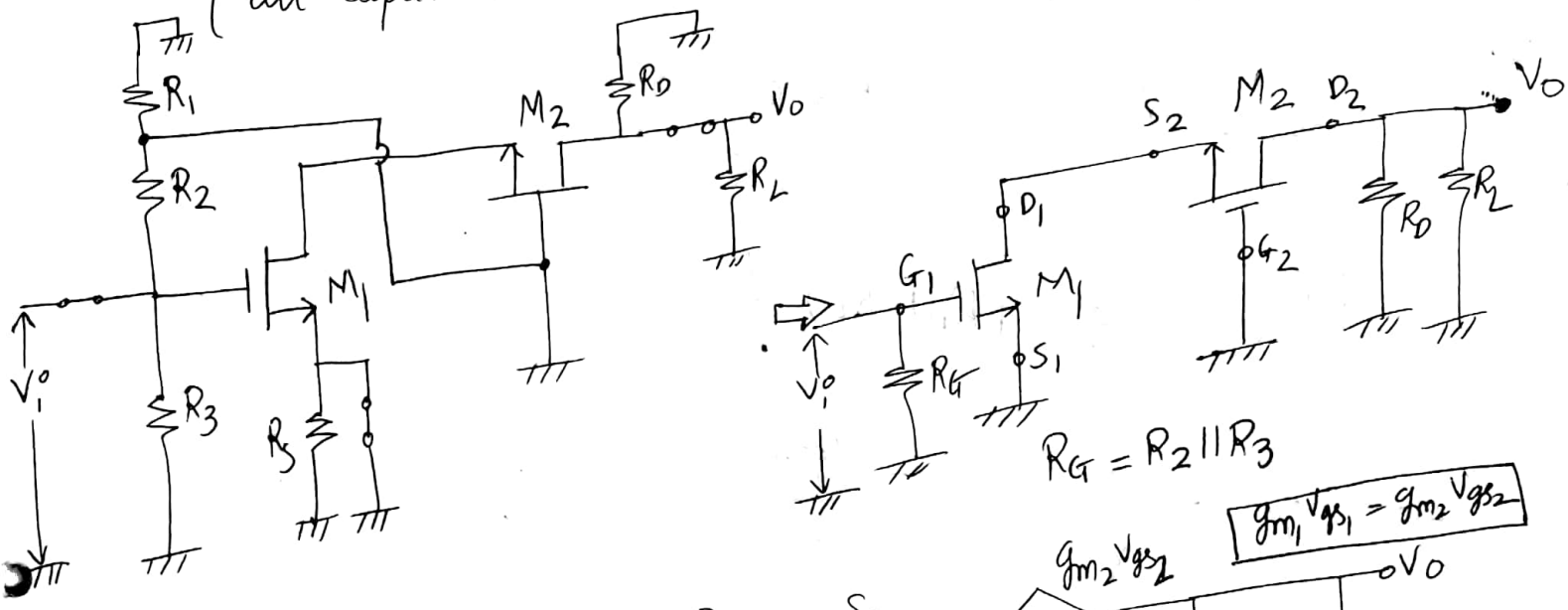

$R_G = R_2 \| R_3$

$\boxed{g_{m_1} V_{gs_1} = g_{m_2} V_{gs_2}}$

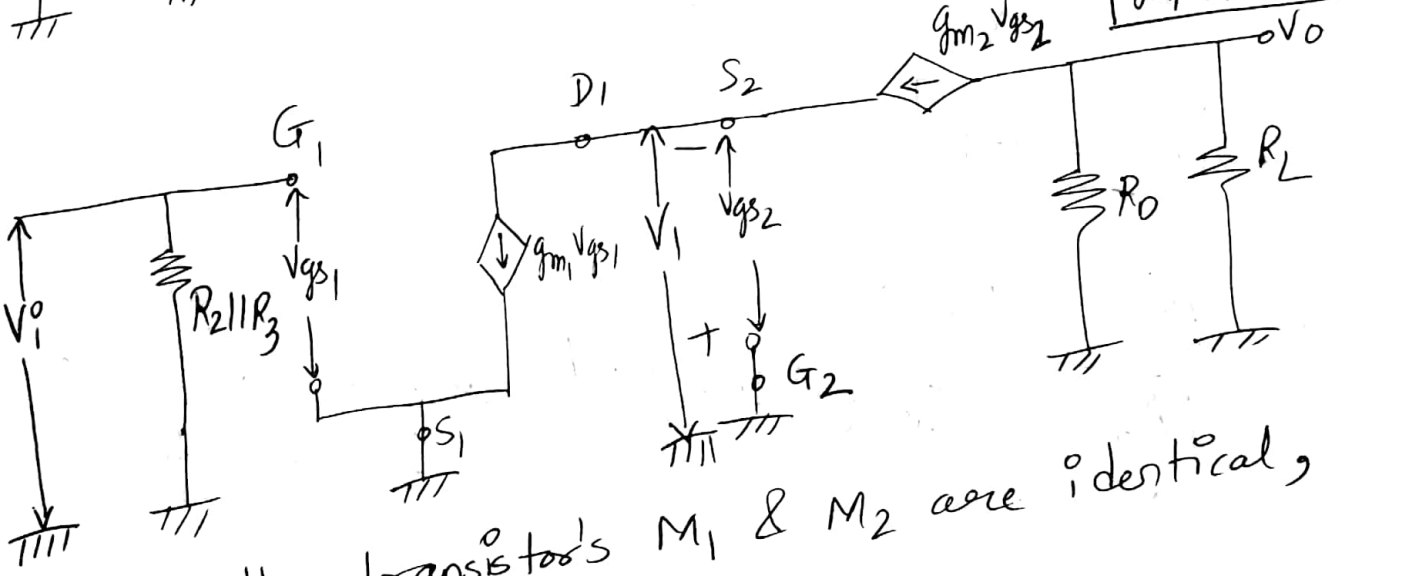

→ Since the transistors M_1 & M_2 are identical,

$$\boxed{g_{m_1} = g_{m_2} = 2K_n (V_{GS} - V_{TN})}$$

→ $Z_i = R_2 \| R_3$

→ $Z_o = R_D \| R_L$

} same as singlestage CS amplifier.

→ $A_{v_2} = \dfrac{V_o}{V_1}$; $A_{v_1} = \dfrac{V_1}{V_i}$

INDERJIT SINGH

Scanned by CamScanner

$$A_{v_T} = \frac{V_o}{V_1} \times \frac{V_1}{V_i}$$

$$\rightarrow A_{v_2} = \frac{V_o}{V_1} = \frac{+g_{m_2} V_{gs_2} (R_D \| R_L)}{-V_{gs_2}}$$

$$\boxed{A_{v_2} = g_{m_2} (R_D \| R_L)}$$

$$\rightarrow A_{v_1} = \frac{V_1}{V_i} = \frac{-V_{gs_2}}{V_{gs_1}} = \frac{-V_{gs_1}}{V_{gs_1}} = -1$$

$$\boxed{A_{v_1} = -1}$$

$$\rightarrow A_{v_T} = A_{v_1} A_{v_2}$$

$$\boxed{A_{v_T} = -g_m (R_D \| R_L)}$$ same as single stage CS amplifier

Feature of Cascode (CS-CG) amplifier:-

- Bandwidth of cascode amplifier is higher compared to single-stage CS amplifier.

Scanned by CamScanner

Applications of Cascode amplifier :-

1. The cascode amplifier is particularly useful in the tuned RF (radio-frequency) amplifier in TV circuits.
   It is also used as a wide-band amplifier.

2. The isolation provided between input and output by a cascode amplifier is very high.

3. It is used in CRO, to adjust the intensity of the waveform.
   Wherever, we change the intensity knob on CRO, we are adjusting the current gain of a cascode amplifier by varying one of its resistance.

Scanned by CamScanner

25. A two stage circuit is shown in Figure 6. It's E-MOSFET parameters are [10]
$k_{n1} = k_{n2} = 0.8mA/V^2$ & $V_{TN1} = V_{TN2} = 0.8V$

a) Calculate the DC parameters of the circuits i.e V_{G1}, V_{G2}, V_{GS1}, I_{D1}, I_{D2}, V_{D2}, V_{S1}, V_{S2}, V_{DS2}, V_{D1}, V_{DS1} & V_{GS2}

b) Calculate input impedance of the circuit

c) Calculate output impedance of the circuit

d) Calculate voltage gain for the circuit

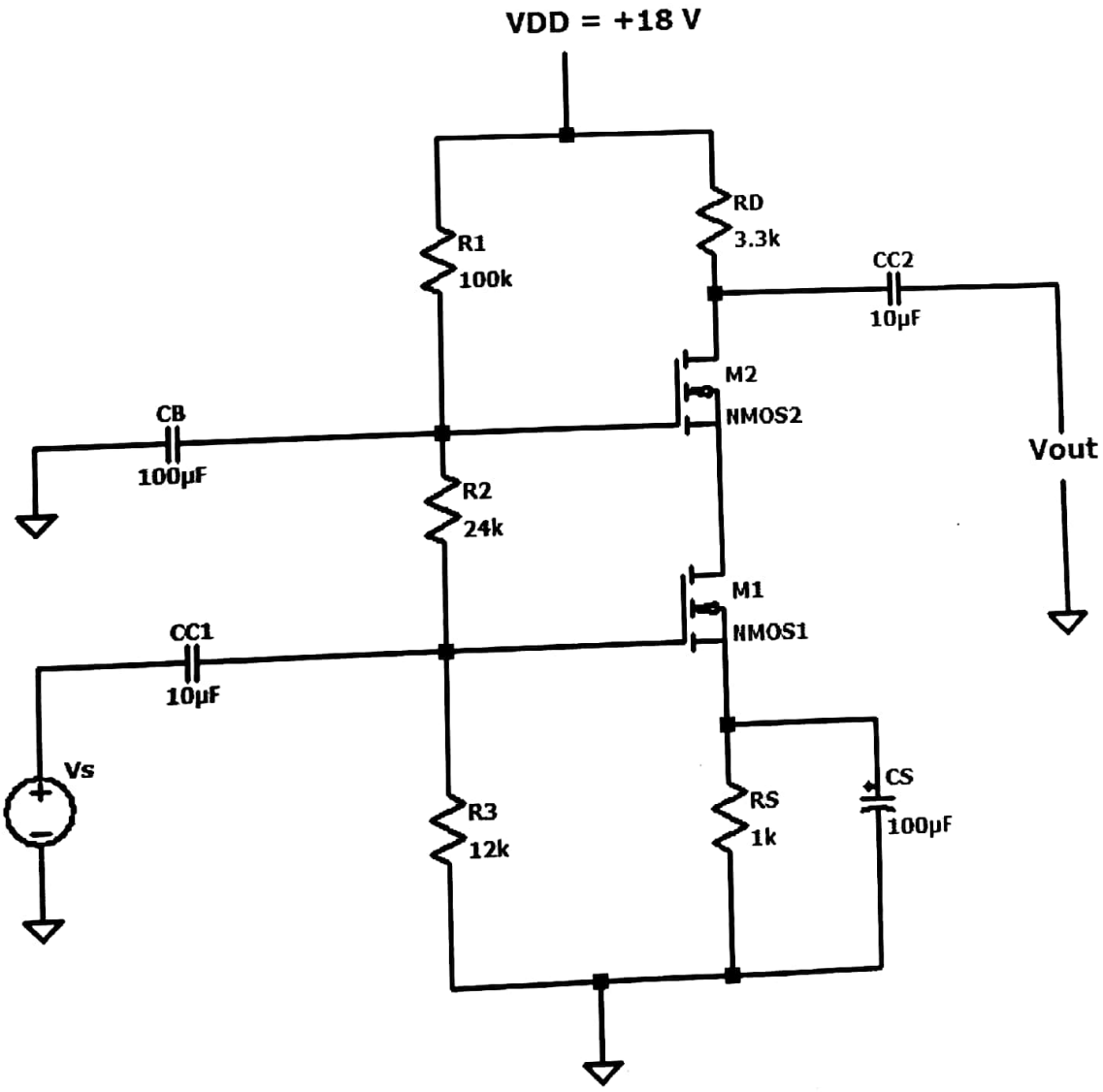

Figure 6: Question 25

Answers: $V_{G1} = 1.588V$ $V_{G2} = 4.76V$ $V_{GS1} = 1.348V$ $I_{D1} = 0.24mA$
$I_{D2} = 0.24mA$ $V_{D2} = 17.2V$ $V_{S1} = 0.24V$ $V_{S2} = 3.416V$ $V_{DS2} = 13.78V$
$V_{D1} = 3.416V$ $V_{DS1} = 3.176V$ $V_{GS2} = 1.348V$ $g_{m1} = g_{m2} = 0.876mA/V$
$Z_i = 8k\Omega$ $Z_o = 3.3k\Omega$ $A_{V1} = -1$ $A_{V2} = 2.89$ $A_{VT} = -2.89$

Scanned by CamScanner

Solution:- DC Analysis :-

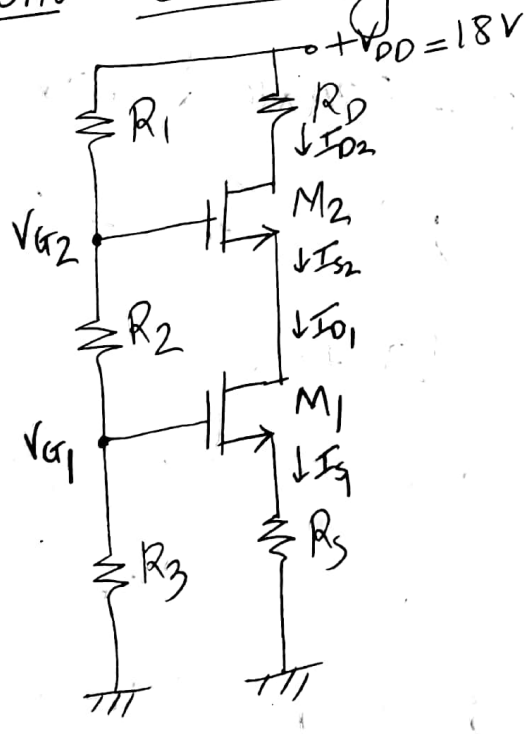

$R_T = R_1 + R_2 + R_3 = 136K\Omega$

- $V_{G_1} = \frac{R_3}{R_T} \times V_{DD} = \frac{12K}{136K} \times 18 = \underline{1.588V}$

- $V_{G_2} = \frac{R_2 + R_3}{R_T} \times V_{DD} = \frac{36K \times 18}{136K} = \underline{4.764V}$

- $V_{GS_1} = V_{G_1} - V_{S_1}$

- $V_{GS_1} = 1.588 - I_{D_1} R_S$

  $V_{GS_1} = 1.588 - 1000 I_{D_1}$ — (1)

- $I_{D_1} = K_{n_1} (V_{GS_1} - V_{TN_1})^2$

  $I_{D_1} = 0.8 \times 10^{-3} (V_{GS_1} - 0.8)^2$ — (2)

DERJIT SINGH

Hanie TUKEDM

Scanned by CamScanner

→ Put ② in ①, we get

- $V_{GS_1} = 1.588 - 0.8\times10^{-3}\times10^{3}(V_{GS_1} - 0.8)^2$
- $V_{GS_1} = 1.588 - 0.8(V_{GS_1}^2 + 0.64 - 1.6V_{GS_1})$
- $V_{GS_1} = 1.588 - 0.8V_{GS_1}^2 - 0.512 + 1.28V_{GS_1}$

→ $0.8V_{GS_1}^2 - 0.28V_{GS_1} - 1.076 = 0$

$\underline{V_{GS_1} = 1.3478V}$ or $-0.9978V$ ✗

$(\because V_{GS_1} > V_{TN_1})$

ie $I_{D_1} = K_{n_1}(V_{GS_1} - V_{TN_1})^2$

$I_{D_1} = 0.8\times10^{-3}(1.3478 - 0.8)^2 = \underline{0.24\ mA}$

ie $I_{D_1} = I_{D_2} = \underline{0.24\ mA}$

→ $V_{D_2} = V_{DD} - I_{D_2}R_D = 18 - 0.24\times10^{-3}\times3.3\times10^{3}$

$V_{D_2} = \underline{17.2V}$; $V_{S_1} = I_{D_1}R_S = \underline{0.24V}$

→ $V_{GS_1} = V_{GS_2} = V_{G_2} - V_{S_2} = 1.3478V$

→ $1.3478 = 4.764 - V_{S_2} \Rightarrow V_{S_2} = \underline{3.416\ V}$

→ $V_{DS_2} = V_{D_2} - V_{S_2} = 17.2 - 3.416 = \underline{13.784\ V}$

→ $V_{D_1} = V_{S_2} = \underline{3.416V}$; $V_{DS_1} = V_{D_1} - V_{S_1}$

$V_{DS_1} = \underline{3.176V}$

Scanned by CamScanner

Small-signal parameters:-

$$g_{m_1} = g_{m_2} = 2K_n(V_{GS} - V_{TN})$$

$$= 2 \times 0.8 \times 10^{-3}(1.3478 - 0.8)$$

$$g_{m_1} = g_{m_2} = \underline{0.876} \ \frac{mA}{V}$$

AC (mid-frequency) equivalent circuit:-

$\boxed{g_{m_2} V_{gs_2} = g_{m_1} V_{gs_1}}$

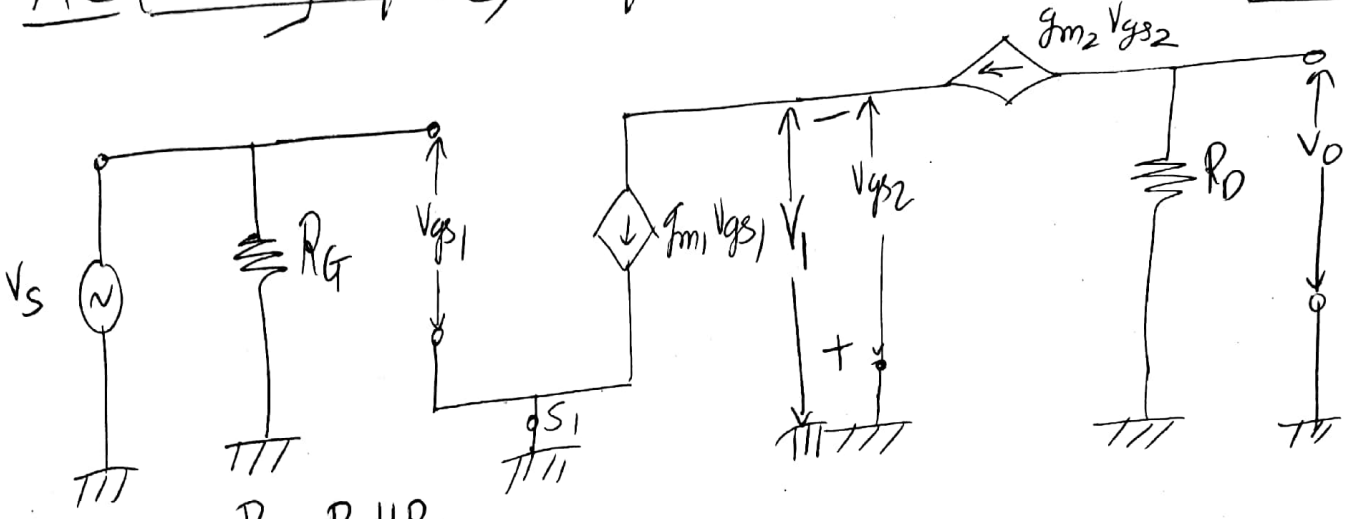

$R_G = R_2 \| R_3$

$\rightarrow Z_i = R_G = R_3 \| R_2 = 24K \| (2K\Omega) = \underline{8K\Omega}$

$\rightarrow Z_o = R_D = \underline{3.3K\Omega}$

$\rightarrow A_{v_2} = \frac{V_o}{V_1} = \frac{-g_{m_2} \cancel{V_{gs_2}} R_D}{-\cancel{V_{gs_2}}} = g_{m_2} R_D$

$A_{v_2} = 0.876 \times 10^{-3} \times 3.3K\Omega = \underline{2.89}$

$\rightarrow A_{v_1} = \frac{V_1}{V_s} = \frac{-V_{gs_2}}{V_{gs_1}} = -\frac{\cancel{V_{gs_1}}}{\cancel{V_{gs_1}}} = \underline{-1}$

$\rightarrow A_{v_T} = A_{v_1} A_{v_2} = \underline{-2.89}$

Scanned by CamScanner

Darlington Pair :-

* invented at Bell labs - Sidney Darlington 1953

→ Multi-transistor configuration (Super-β transistor)

→ provides very large current gain

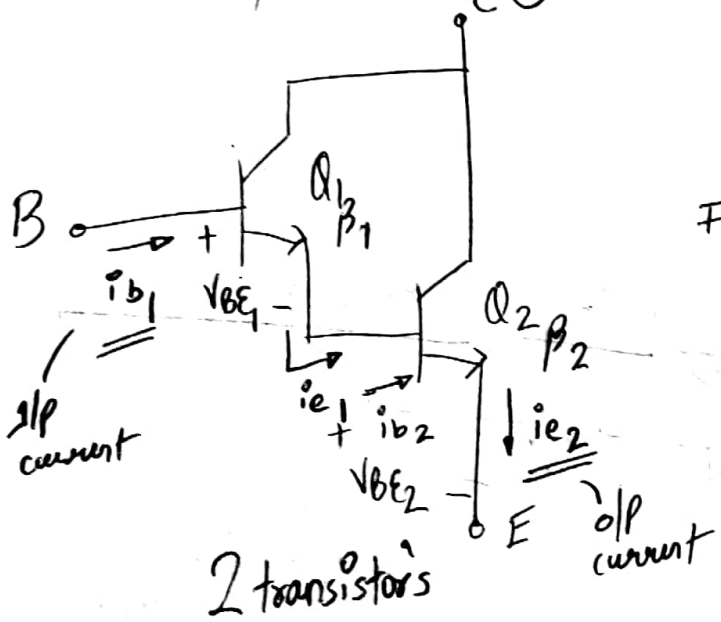

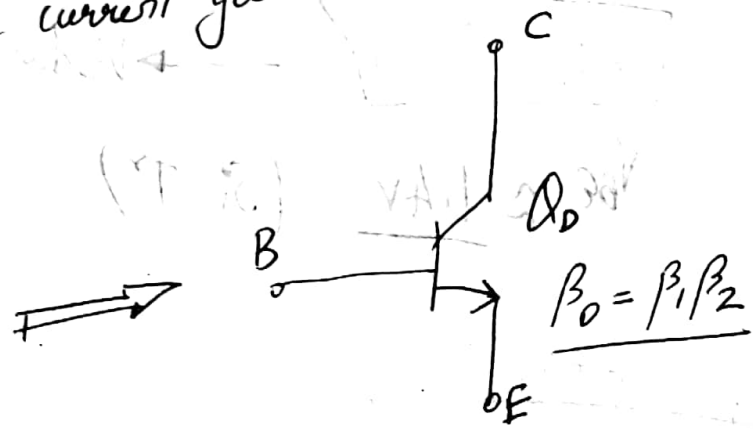

i/p current $= i_{b_1}$

o/p current $= i_{e_2}$

current gain $A_i = \dfrac{\text{o/p current}}{\text{i/p current}} = \dfrac{i_{e_2}}{i_{b_1}}$

$$\begin{cases} i_e = i_c + i_b \\ i_e = \beta i_b + i_b \Rightarrow i_e \approx (1+\beta) i_b \\ \qquad\qquad\qquad\qquad i_e \approx \beta i_b \end{cases}$$

$A_i \Rightarrow \quad i_{e_2} = \beta_2 i_{b_2}$

$A_i = \dfrac{\beta_2 i_{b_2}}{i_{b_1}}$; $i_{e_1} = i_{b_2}$

$= \dfrac{\beta_2 i_{e_1}}{i_{b_1}}$; $i_{e_1} = \beta_1 i_{b_1}$

$A_i = \dfrac{\beta_2 \beta_1 \cancel{i_{b_1}}}{\cancel{i_{b_1}}}$

$$\boxed{A_i = \beta_1 \beta_2}$$

— Current gain of Darlington Pair

Scanned by CamScanner

$V_{BE} = V_{BE_1} + V_{BE_2}$

$V_{BE_1} \approx V_{BE_2} \approx 0.7$ (Si Tr)

$\boxed{V_{BE} \approx 2V_{BE_1}}$ ---→ Disdavantage of Darlington pair

$V_{BE} \approx \underline{1.4V}$ (Si Tr)

Scanned by CamScanner