K. J. Somaiya College of Engineering, Mumbai-77

(Autonomous College Affiliated to University of Mumbai)

Semester: Jan 2020 – May 2020

Max. Marks: 30 | **Duration: 1hr.15 min.**

Class: S.Y B.Tech | **Semester: IV**

Branch: Electronics | **Course Code: 2UXC402**

Course Name: Electronic Circuits Analysis and Design

Test 1

Q. No	Questions	Marks
Q.1	Design a two stage RC coupled cascade amplifier to meet the following specifications: $A_V \geq 140$ $V_{ORMS} = 3V$ $R_i \geq 1.2\ M\Omega$ $f_L = 30\ Hz$ Select a suitable transistor from the datasheet. Use standard values for all the resistors and capacitors in your design	15

Scanned with CamScanner

Q1. Design of cascade amplifier

1. Selection of CS-CS JFET cascade amplifier
2. Selection of JFET from datasheet & writing its specifications — (1m)

3. Selection of invidual stage voltage gain:- A_{v_1} & A_{v_2} — (2m)

4. Calculation of I_{D_2Q} & V_{GSQ_2} using either zero-temperature drift or mid-point biasing techniques — (2m)

5. Calculation of R_{D_2} — (1m)

6. Calculation of R_{S_2} — (1/2m)

7. Calculation of R_{G_2} — (1/2m)

8. Calculation of V_{DD} — (2m)

9. Selection of R_{D_1} — (1m)

10. Selection of R_{S_1} — (1/2m)

11. Selection of R_{G_1} — (1/2m)

12. Selection of coupling capacitors (C_{c_1}, C_{c_2}, C_{c_3}) — (2m)

Scanned with CamScanner

13. Selection of Bypass capacitors (C_{S_1} & C_{S_2})] — (1m)

14. Complete designed circuit with all standard values of R & C.] — (1m)

Scanned with CamScanner

Q.1	a) A two stage circuit is shown in figure 1. It's E-MOSFET parameters are: kn1 = kn2 = 0.8mA/V^2, $V_{TN1} = V_{TN2} = 0.8V$	

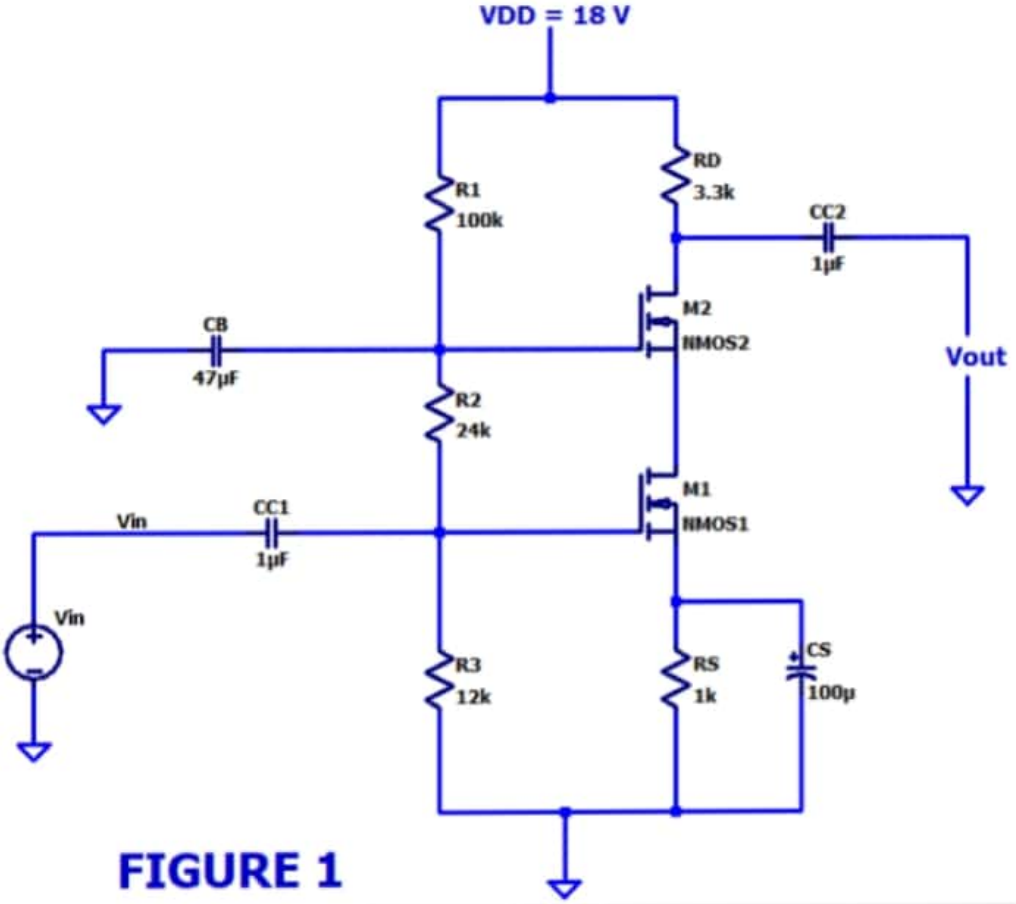

FIGURE 1

	i) Calculate the DC parameters of the circuit i.e V_{G1}, V_{G2}, I_{D1}, I_{D2}, V_{D1}, V_{D2}, V_{S1} & V_{S2}	04
	ii) Draw small signal equivalent circuit of figure 1	01
	iii) Calculate overall voltage gain of the circuit	03
	iv) Calculate input impedance and output impedance of the circuit	02

Scanned with CamScanner

Solution:- DC Analysis :-

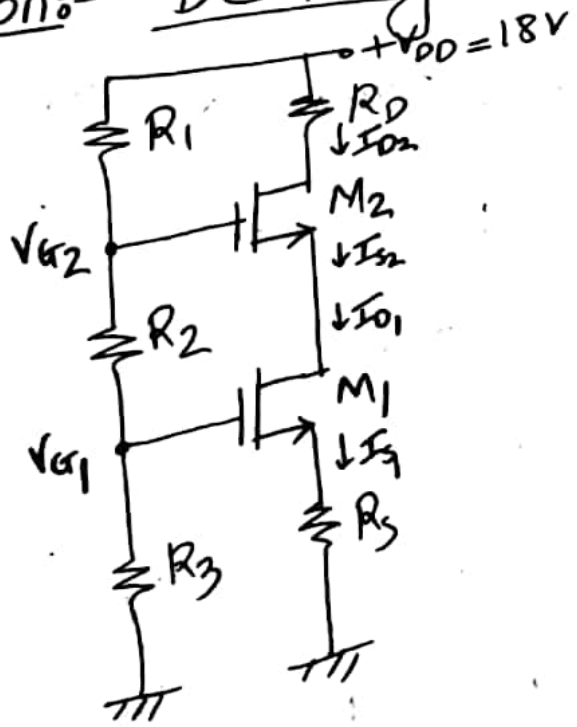

$R_T = R_1 + R_2 + R_3 = 136K\Omega$

- $V_{G_1} = \frac{R_3}{R_T} \times V_{DD} = \frac{12K}{136K} \times 18 = \underline{1.588V}$
- $V_{G_2} = \frac{R_2+R_3}{R_T} \times V_{DD} = \frac{36K \times 18}{136K} = \underline{4.764V}$
- $V_{GS_1} = V_{G_1} - V_{S_1}$
- $V_{GS_1} = 1.588 - I_{D_1} R_S$
- $V_{GS_1} = 1.588 - 1000 I_{D_1}$ — (1)
- $I_{D_1} = K_{n_1} (V_{GS_1} - V_{TN_1})^2$
- $I_{D_1} = 0.8 \times 10^{-3} (V_{GS_1} - 0.8)^2$ — (2)

Scanned with CamScanner

→ Put ② in ①, we get

- $V_{GS_1} = 1.588 - 0.8\times10^{-3}\times10^{3}(V_{GS_1} - 0.8)^2$
- $V_{GS_1} = 1.588 - 0.8(V_{GS_1}^2 + 0.64 - 1.6V_{GS_1})$
- $V_{GS_1} = 1.588 - 0.8V_{GS_1}^2 - 0.512 + 1.28V_{GS_1}$

→ $0.8V_{GS_1}^2 - 0.28V_{GS_1} - 1.076 = 0$

$\underline{V_{GS_1} = 1.3478V}$ or $-0.9978V$ ✗

$(\because V_{GS_1} > V_{TN_1})$

ie $I_{D_1} = K_{n_1}(V_{GS_1} - V_{TN_1})^2$

$I_{D_1} = 0.8\times10^{-3}(1.3478 - 0.8)^2 = \underline{0.24\ mA}$

ie $I_{D_1} = I_{D_2} = \underline{0.24\ mA}$

→ $V_{D_2} = V_{DD} - I_{D_2}R_D = 18 - 0.24\times10^{-3}\times3.3\times10^{3}$

$V_{D_2} = \underline{17.2V}$; $V_{S_1} = I_{D_1}R_S = \underline{0.24V}$

→ $V_{GS_1} = V_{GS_2} = V_{G_2} - V_{S_2} = 1.3478V$

→ $1.3478 = 4.764 - V_{S_2} \Rightarrow V_{S_2} = \underline{3.416\ V}$

→ $V_{DS_2} = V_{D_2} - V_{S_2} = 17.2 - 3.416 = \underline{13.784\ V}$

→ $V_{D_1} = V_{S_2} = \underline{3.416V}$; $V_{DS_1} = V_{D_1} - V_{S_1}$

$V_{DS_1} = \underline{3.176V}$

Scanned with CamScanner

Small-signal parameters:-

$$g_{m_1} = g_{m_2} = 2K_n(V_{GS} - V_{TN})$$

$$= 2 \times 0.8 \times 10^{-3}(1.3478 - 0.8)$$

$$g_{m_1} = g_{m_2} = \underline{0.876} \ \frac{mA}{V}$$

AC (mid-frequency) equivalent circuit:-

$\boxed{g_{m_2} V_{gs_2} = g_{m_1} V_{gs_1}}$

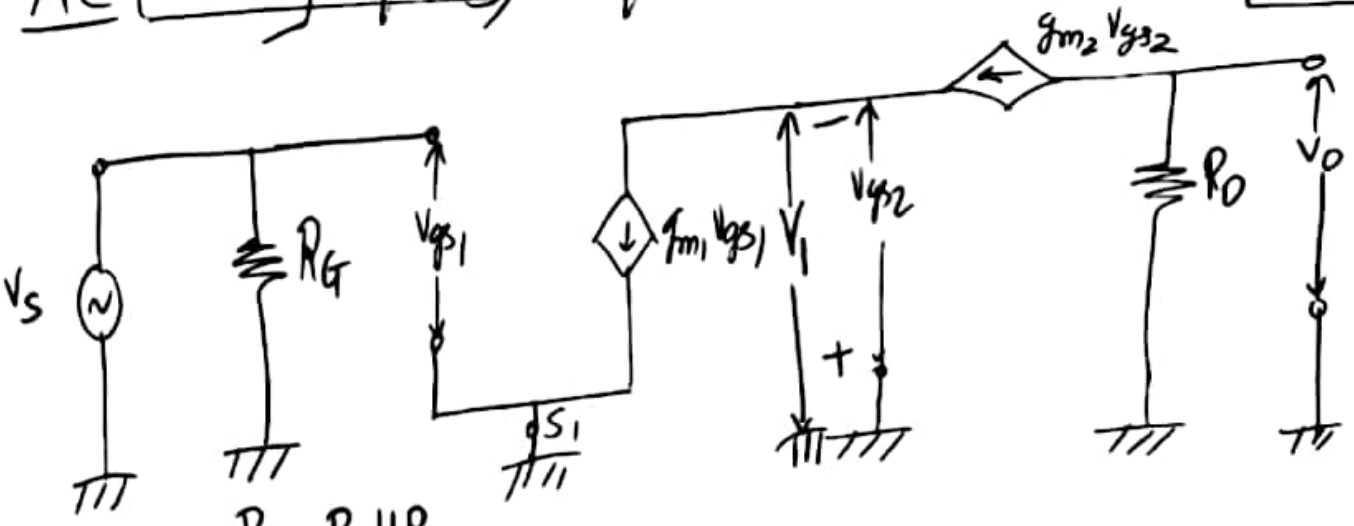

$R_G = R_2 \| R_3$

$\rightarrow Z_i = R_G = R_3 \| R_2 = 24K \| (2K\Omega) = \underline{8K\Omega}$

$\rightarrow Z_o = R_D = \underline{3.3K\Omega}$

$\rightarrow A_{v_2} = \frac{V_o}{V_1} = \frac{-g_{m_2} V_{gs_2} R_D}{-V_{gs_2}} = g_{m_2} R_D$

$A_{v_2} = 0.876 \times 10^{-3} \times 3.3K\Omega = \underline{2.89}$

$\rightarrow A_{v_1} = \frac{V_1}{V_s} = \frac{-V_{gs_2}}{V_{gs_1}} = -\frac{V_{gs_1}}{V_{gs_1}} = \underline{-1}$

$\rightarrow A_{v_T} = A_{v_1} A_{v_2} = \underline{-2.89}$

Scanned with CamScanner

Q.1	b) Draw the following for CS-CS RC coupled amplifier (use Enhancement n-channel MOSFETs)	
	i) Circuit Diagram	01
	ii) Mid-frequency equivalent circuit	02
	iii) Write the expression for input impedance and output impedance of the circuit	02

Scanned with CamScanner

Q1b) CS-CS RC coupled amplifier

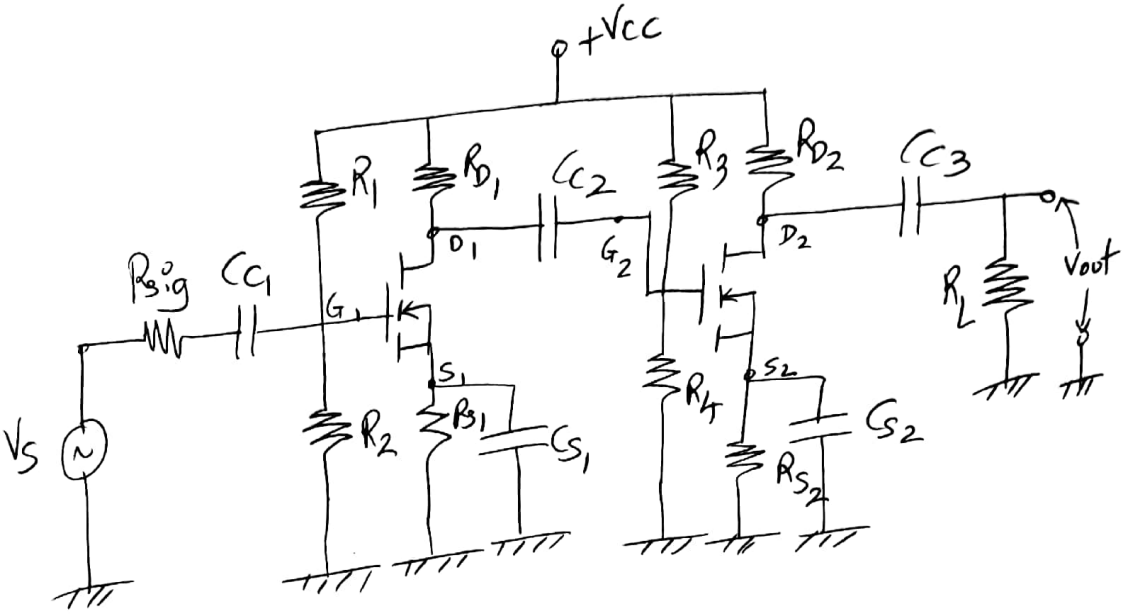

Circuit - diagram

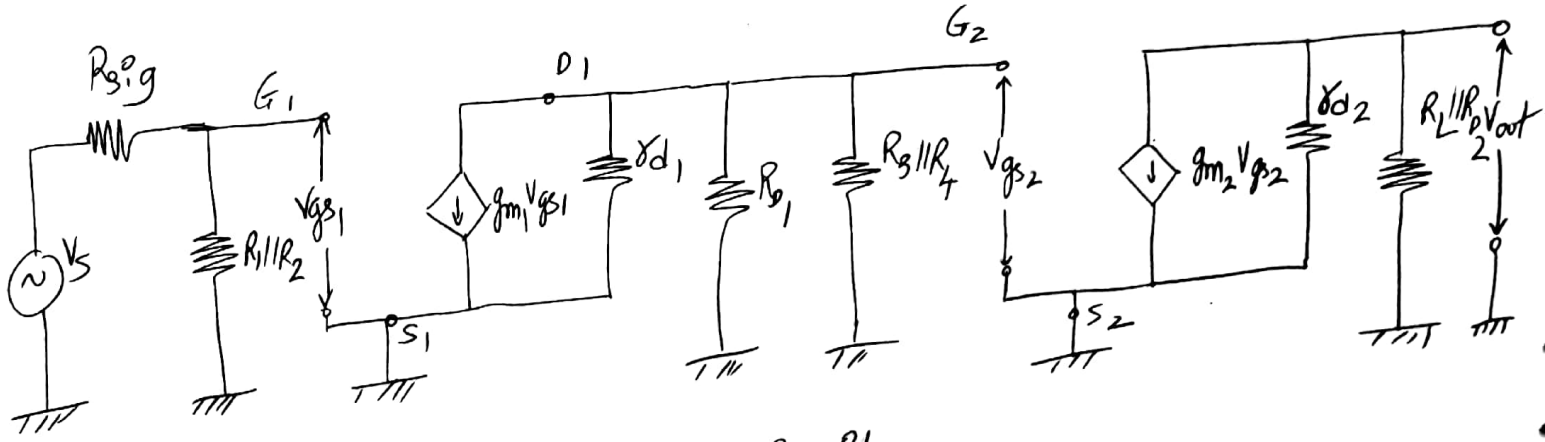

Mid-frequency equivalent circuit

- Input impedance $Z_i = R_1 || R_2$; $Z_{is} = R_{sig} + R_1 || R_2$
- O/p impedance $Z_o = r_{d2} || R_{D2} || R_L$

Scanned with CamScanner

Q.2	Consider the circuit shown in figure 2, Given: $\beta = 100$ $V_{BE} = 0.7$ V $r_{\pi} = 2.1K\Omega$ $A_{VMID} = -72.8$	

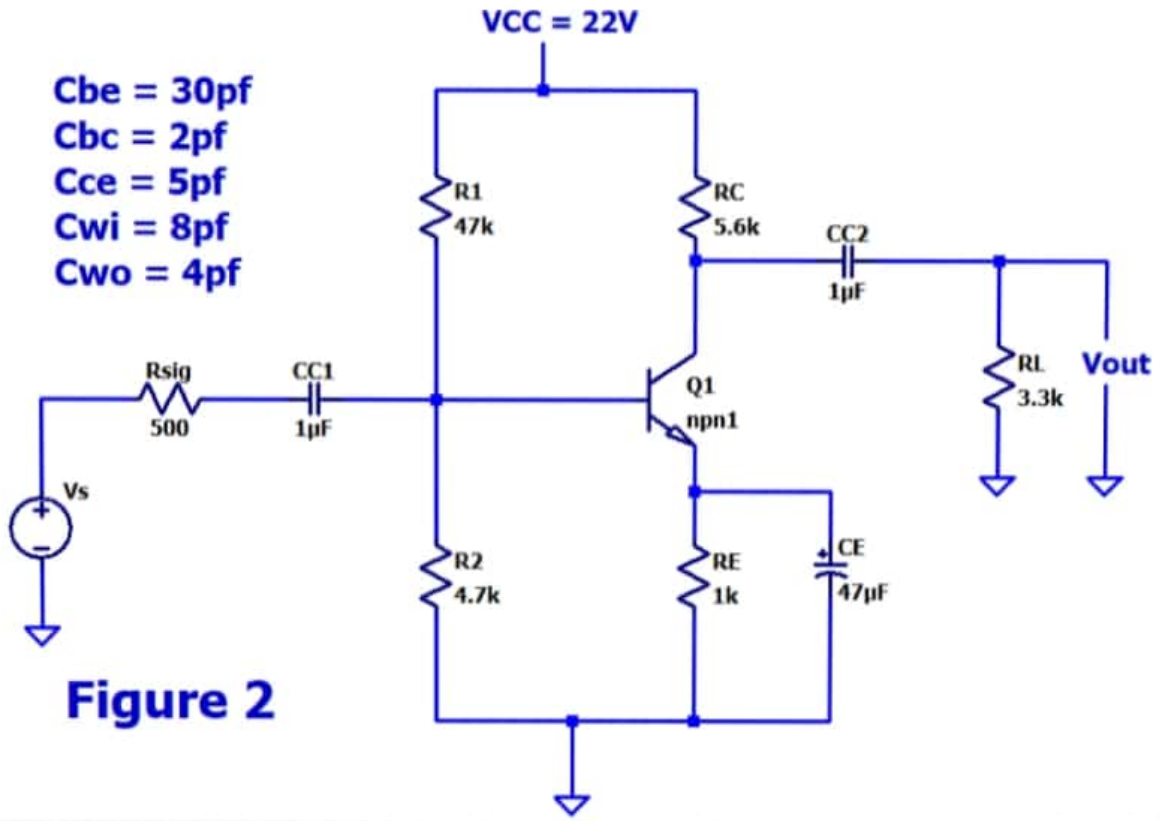

Figure 2

	i) Calculate the higher cut-off frequency of the circuit	07

Scanned with CamScanner

- High frequency AC equivalent circuit,

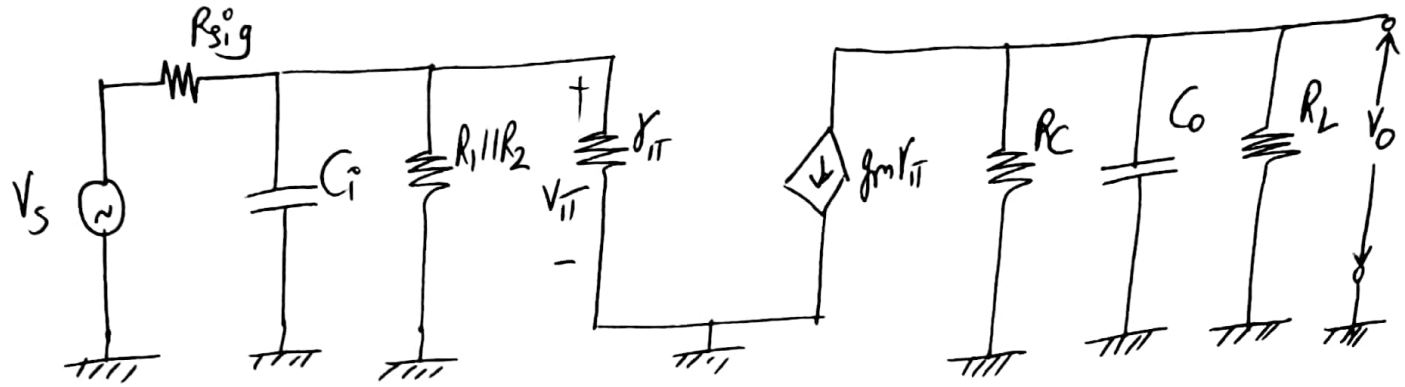

- $C_i = C_{wi} + C_{mi} + C_{be}$

- $C_o = C_{wo} + C_{mo} + C_{ce}$

(1m) - $C_{mi} = C_{bc}(1 - A_{v\,mid\,with\,B}) = 2pf\,(1 - (-72.81)) = \underline{147.62\,pf}$

(1m) - $C_{mo} = C_{bc}\left(1 - \dfrac{1}{A_{v\,mid\,with\,B}}\right) = 2pf\left(1 - \dfrac{1}{(-72.81)}\right) = \underline{2.027\,pf}$

- $C_i = C_{wi} + C_{mi} + C_{be} = 8pf + 147.62pf + 30pf$

(1m) $C_i = \underline{185.62\,pf}$

(1m) - $C_o = C_{wo} + C_{mo} + C_{ce} = 4pf + 2.027pf + 5pf = \underline{11.027\,pf}$

- $f_{Hi} = \dfrac{1}{2\pi R_{eq} C_i}$; $R_{eq} = R_{sig} \| R_1 \| R_2 \| r_\pi$
$= 0.5K \| (1.41K)$
$= 369.11\,\Omega$

$= \dfrac{1}{2\pi \times 369.11 \times 185.62pf}$

(1m) $\boxed{f_{Hi} = 2.323\ MHz}$

- $f_{Ho} = \dfrac{1}{2\pi R_{eq} C_o}$; $R_{eq} = R_C \| R_L$
$= 2.076K$

$f_{Ho} = \dfrac{1}{2\pi \times 2.076K \times 11.027pf}$ i.e $\boxed{f_{Ho} = 6.95\ MHz}$ (1m)

Scanned with CamScanner

Higher cut-off frequency of the circuit is the lowest among f_{Hi} & f_{Ho}

$\therefore$ $\boxed{f_H = 2.323 \text{ MHz}}$ (1M)

Scanned with CamScanner

Q.3	Explain Miller effect (no derivation expected, only concept is expected)	03

Scanned with CamScanner

Q3. <u>Miller effect</u>: (only concept)

- Statement

- C_{mi}

- C_{mo}

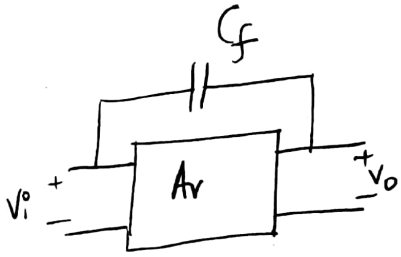

Cf – f/b capacitor betn i/p & o/p terminals

Miller effect

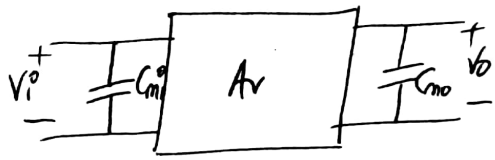

$$C_{mi} = C_f(1 - A_v)$$

$$C_{mo} = \left(1 - \frac{1}{A_v}\right) C_f$$

- <u>Condition</u>:- Gain A_v is −ve

Scanned with CamScanner

Q.3	Consider the Low frequency equivalent circuit shown in figure 3. Given: $R_1 = 220k\Omega$, $R_2 = 75k\Omega$, $R_D = 3k\Omega$, Rsig = 100Ω, $R_S = 820\Omega$, $R_L = 1.2\ k\Omega$, $r_d = 50\ k\Omega$, $C_{C1} = 1\mu F$, $C_{C2}=1\ \mu F$, $C_S = 100\ \mu F$ Calculate the lower cut-off frequency due to C_{C1} only	03

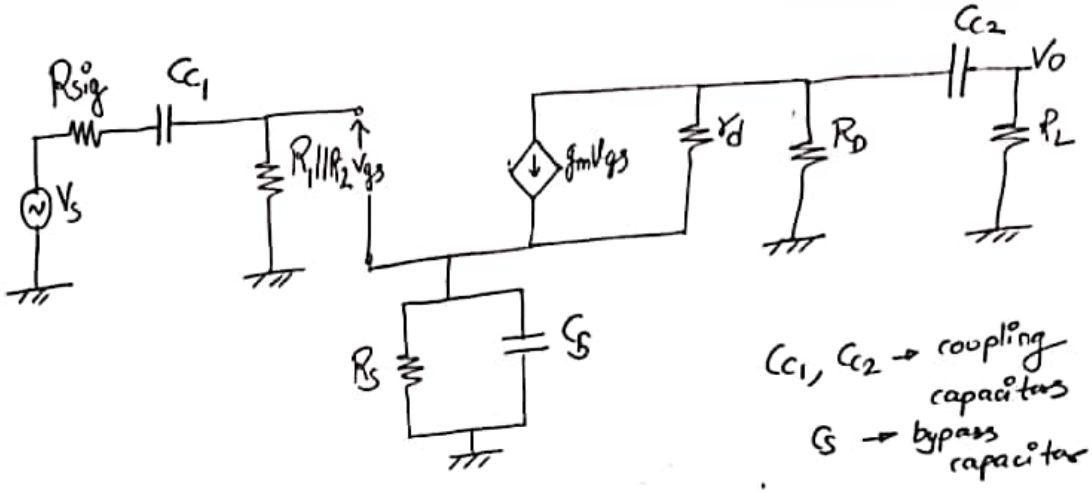

Figure 3

Scanned with CamScanner

Q3. Lower-cut-off frequency due to C_{C_1} only

$$f_{LC_1} = \frac{1}{2\pi R_{eq} C_{C_1}}$$

; $R_{eq} = R_{sig} + R_1 \| R_2$

$= 100 + 220K \| 75K$

$= 100 + 55.93K$

$= 56.03\ K\Omega$

$$= \frac{1}{2\pi \times 56.03 \times 10^3 \times 1 \times 10^{-6}}$$

$$\boxed{f_{LC_1} = 2.84\ Hz}$$

Scanned with CamScanner

Q.4	Consider the circuit shown in figure 4, Given: $\beta_1 = \beta_2 = 100$ $V_{BE1} = V_{BE2} = 0.7$ V	

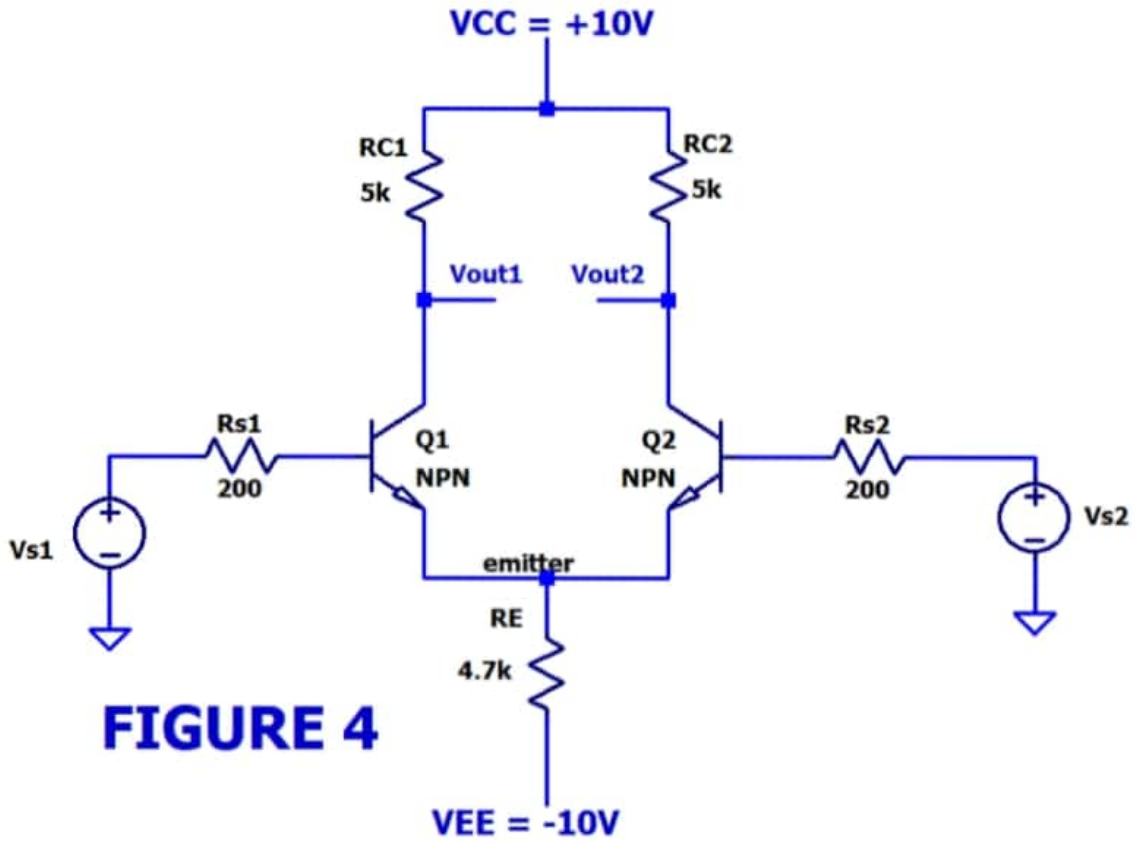

FIGURE 4

	i) Identify the given circuit in figure 4, and write its name	01
	ii) Calculate I_{CQ1} and I_{CQ2}	02
	iii) Calculate V_{CE1} and V_{CE2}	02

Scanned with CamScanner

Q4. i) Given circuit is <u>Dual input balanced o/p differential amplifier</u>

$\beta_1 = \beta_2 = 100$

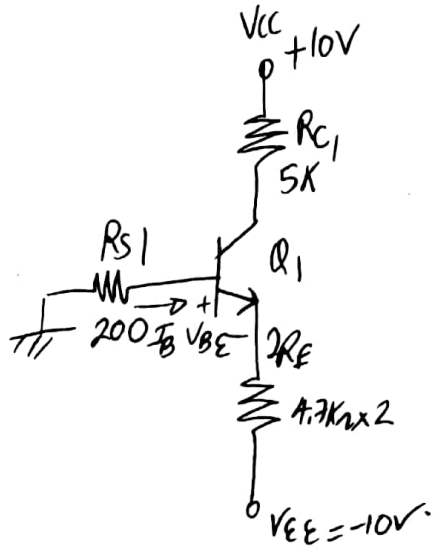

ii) KVL to B-E loop,

$$-I_{BQ}R_{S_1} - V_{BE} - 2I_{EQ}R_E - (-V_{EE}) = 0$$

$$I_{BQ} = \frac{V_{EE} - V_{BE}}{R_{S_1} + (1+\beta_1)2R_E}$$

$$I_{BQ} = \frac{10 - 0.7}{200 + 101 \times 2 \times 4.7K\Omega}$$

$$I_{BQ} = 9.7935\ \mu A$$

ie $I_{CQ} = \beta I_{BQ} = \underline{0.97936\ mA}$

ie $\boxed{I_{CQ_1} = I_{CQ_2} = I_{CQ} = 0.97936 mA}$

iii) KVL to B-C loop,

$$V_{CC} - I_{CQ}R_{C_1} - V_{CE} - 2R_E I_{EQ} + V_{EE} = 0$$

$$V_{CEQ} = V_{CC} + V_{EE} - I_{CQ}(R_C + 2R_E)$$

$$= 10 + 10 - 0.97936 \times 10^{-3}(5K + 2 \times 4.7K)$$

$$V_{CEQ} = 5.897V$$

ie $\boxed{V_{CEQ_1} = V_{CEQ_2} = V_{CEQ} = 5.897V}$

Scanned with CamScanner