D. J. SANGHVI COLLEGE OF ENGINEERING
DEPARTMENT OF ELECTRONICS ENGINEERING
EXC302: ELECTRONIC DEVICES SEM III
MID TERM 1

3rd **September, 2016** **[Total Marks: 20]**

1. **Attempt all the questions for 20 marks.**
2. **Read the questions carefully before attempting.**
3. **Don't rewrite the question while answering, only answers have to be written.**

Given: $n_i = 1.5 \times 10^{10}/cm^3$, $\epsilon_s = 10^{-12}F/cm$, $\dfrac{KT}{q} = 0.026V$, $q = 1.6 \times 10^{-19}$ C

1. For a Si uniformly doped PN junction, acceptor doping concentration $N_A = 10^{17}/cm^3$ and donor doping concentration $N_D = 10^{18}/cm^3$ at T=300K.

   a) Calculate the built-in potential (V_{bi}) for the junction under zero-applied bias. **[1]**

   b) Now calculate the depletion region width (W) for the junction. **[1]**

   c) Find depletion capacitance C_{dep} for a reverse voltage of -5V and area of $10^{-4}/cm^2$ **[1]**

   d) Consider the band diagram shown below, and then answer the following questions:

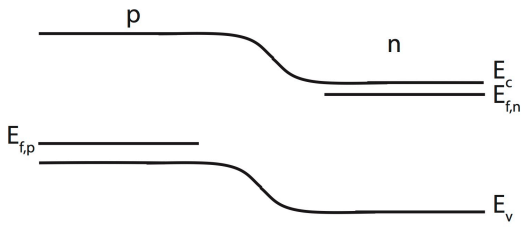

   i) What is the direction of electron diffusion and drift? **[1]**

   ii) What is the direction of hole diffusion and drift? **[1]**

2. a) Calculate the current through a silicon diode at room temperature when a voltage of -5V is applied to the p-side of the junction. Assume a reverse saturation current $I_0 = 2 \times 10^{-12}$ A. **[1]**

   b) Draw energy band digram of a pn junction in reverse bias. In the diagram, show potential barrier, energy-gap, space-charge width and applied reverse voltage. **[1]**

   c) Draw small-signal model of a PN diode. Name the various components in it. **[1]**

   d) Two students were performing zener regulator experiment. They got the readings for variations in the load regulations as follows:

	Student A	Student B
$R_L(K\Omega)$	$V_L(volts)$	$V_L(volts)$
1	6.415	6.252
3	6.420	6.325
5	6.421	6.545
7	6.425	6.785
9	6.432	6.995

Among the students A and student B, which regulator do you think is showing better results and why ? **[1]**

e) In the diagram of zener as voltage regulator shown below, explain how regulator keeps load voltage V_L almost constant when line voltage V_{in} varies. **[1]**

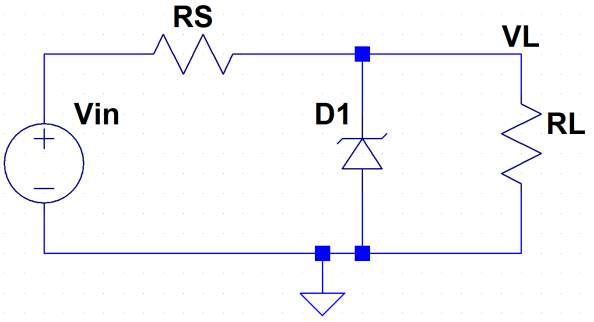

3. Answer the following questions w.r.t diagram given below:

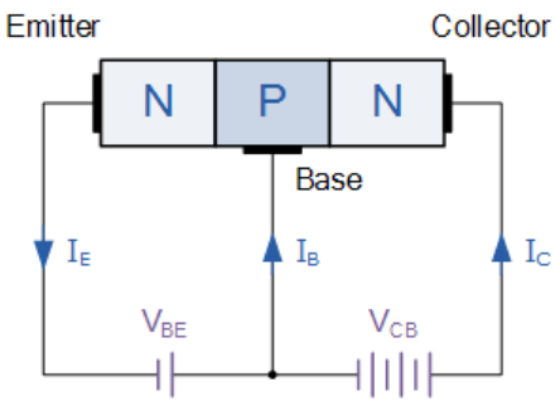

a) Given device is connected in which mode? **[1]**

b) Draw minority carrier distribution in this mode? **[1]**

c) Draw EBD in this mode? **[1]**

d) You have a silicon pnp bipolar junction transistor in which you measure a base current of 50μA when the collector current is 3mA.

i) What is the emitter current? **[0.5]**

i_E (in mA): _____

ii) What is the common emitter current gain of the transistor? **[0.5]**

β: _____

e) Explain the terms emitter injection efficiency and base transport factors w.r.t BJT? **[1]**

4. a) Draw Eber's Moll model for an npn BJT. **[1]**

b) Write Eber's Moll model equation's for an npn BJT. **[1]**

c) For a N-channel JFET, starting from Shockely's equation, derive an expression for transconductance (g_m) **[1]**

d) For an N-channel JFET, find drain current I_D if $I_{DSS} = 8mA$, $V_{GS} = -1$V and $V_P = -3V$ **[1]**

e) Compare BJT and JFET (any 4 points) **[1]**

****