LICD lecture 04 dated 20-07-2018

Topics Covered : Inverting adder Analysis and its application, Case of Averaging amplifier, Implementation of Linear equation using Inverting adder and its Simulation Demo shown, Exposure to LT Spice by implementing inverting amplifier circuit from scratch LIVE in class, Non-inverting adder topic given to students as Self study

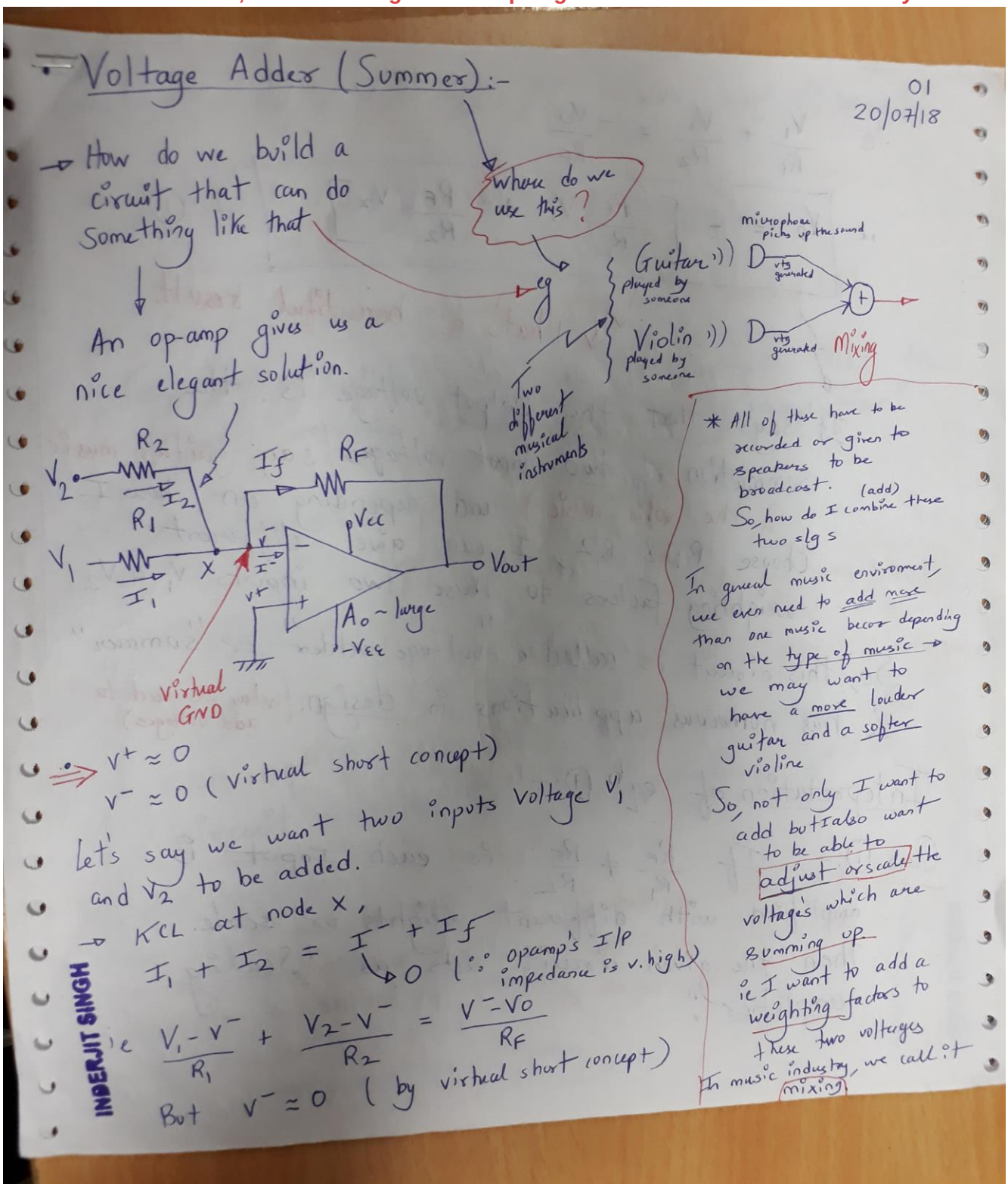

ie $\frac{V_1}{R_1} + \frac{V_2}{R_2} = -\frac{V_0}{R_F}$

ie $$\boxed{V_0 = -\left[\left(\frac{R_F}{R_1}\right)V_1 + \left(\frac{R_F}{R_2}\right)V_2\right]} \quad — (1)$$

That's a beautiful result.

It' says that the Output voltage is the summation of two input voltages (say guitar music & the violin music) and depending on how I choose R_1 & R_2, I can give different weighting factors to these two inputs V_1 & V_2

So, this circuit is called a "voltage adder" or "summer" & has numerous applications in design. (where we need to add voltages)

Intepretation of eqn (1):-

Case (1):- If $\frac{R_F}{R_1} \neq \frac{R_F}{R_2}$ ie each Input is amplified with different weights or scale. Then the given circuit acts as "Scaling amplifier".

Case (2):- If $R_1 = R_2 = R$, then eqn (1) becomes,

$$\boxed{V_0 = -\frac{R_F}{R}(V_1 + V_2)} \quad -(2)$$

-ve s/g means o/p is inverted!!!

From above eqn (2), we can interpretate that the circuit behaves as a "Summing amplifier".

Case (3):- If we keep $R_1 = R_2 = R_F = R$, then eqn (1) becomes,

$$\boxed{V_0 = -(V_1 + V_2)} \quad -(3)$$

Here, o/p vtg is a sum of two I/p voltages.

From eqn (3), we can interpretate that the circuit acts as an "Inverting adder".

Inverting name becoz of its -ve sign the expression.

Textbook definition:-
opamp may be used to design a circuit whose o/p voltages is the sum of several I/p voltages. Such a circuit is called "Summing amplifier" or "Summer"

INDERJIT SINGH

Quiz:

Determine the o/p expression for the following circuit.

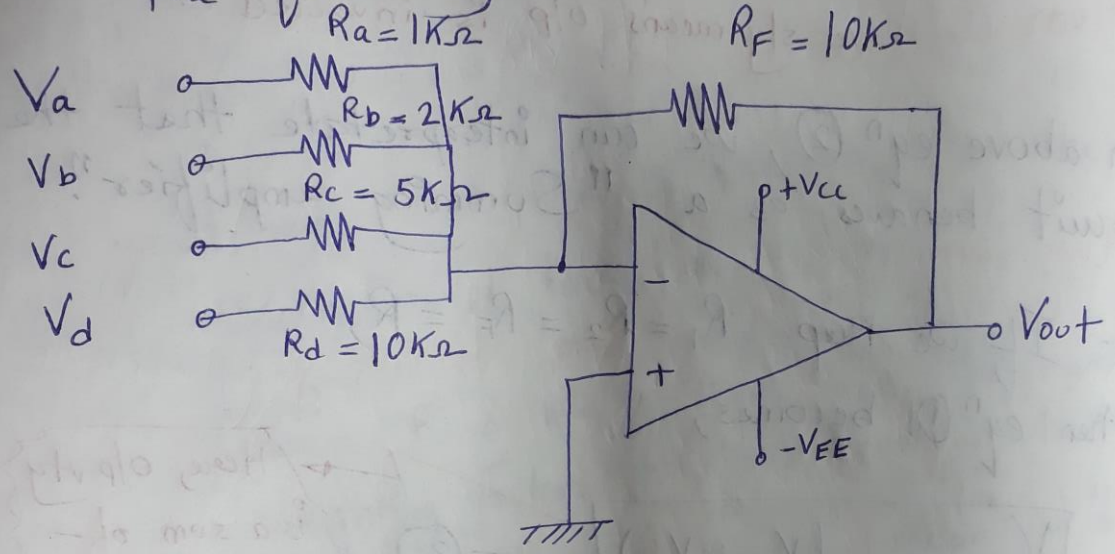

Well think for few minutes & work out for the o/p expression!

AHA, the above ckt is an inverting adder adding 4 I/p voltages

Ans: $V_o = -10V_a - 5V_b - 2V_c - V_d$

INDERJIT SINGH

Implement the following Linear equation using opamp:

$$V_0 = 3V_1 + 5V_2 - V3$$

Soln:- Don't panic !!!

Let's use whatever we have learned from inverting adder topic.

1. Let's implement 1st two terms of the eqn 1st.-

ie $3V_1$ & $5V_2$

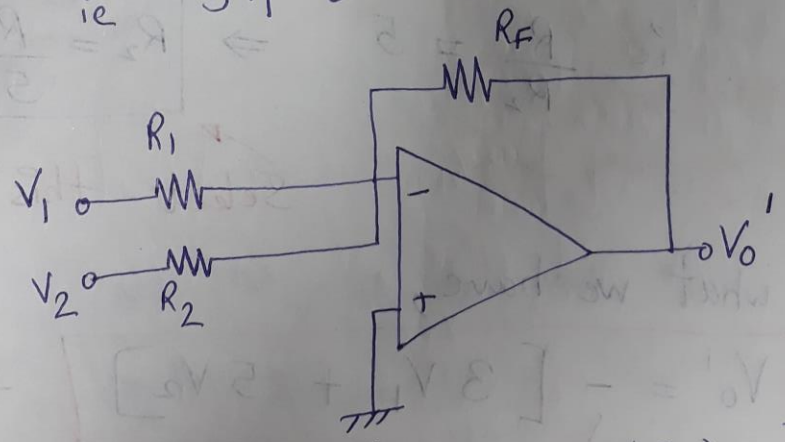

We know, $V_0' = -\left[\left(\frac{R_F}{R_1}\right)V_1 + \left(\frac{R_F}{R_2}\right)V_2\right]$

We want this as 3 & 5 → let's do that

INDERJIT SINGH

Let's say $R_F = R$

then to make $3V_1$, we want

$$\frac{R_F}{R_1} = 3$$

ie $$\frac{R}{R_1} = 3 \Rightarrow \boxed{R_1 = \frac{R}{3}}$$

Select this

Similarly, to make $5V_2$, put

$$\frac{R_F}{R_2} = 5$$

ie $$\frac{R}{R_2} = 5 \Rightarrow \boxed{R_2 = \frac{R}{5}}$$

Select this

Let's see what we have,

$$\boxed{V_o' = -[3V_1 + 5V_2]} \quad \text{— (A)}$$

OMG, what to do with this minus sign!!!

INDERJIT SINGH

In order to achieve our goal $\boxed{V_0 = 3V_1 + 5V_2 - V_3}$

We need to apply the o/p V_0' to another inverting adder. as follows

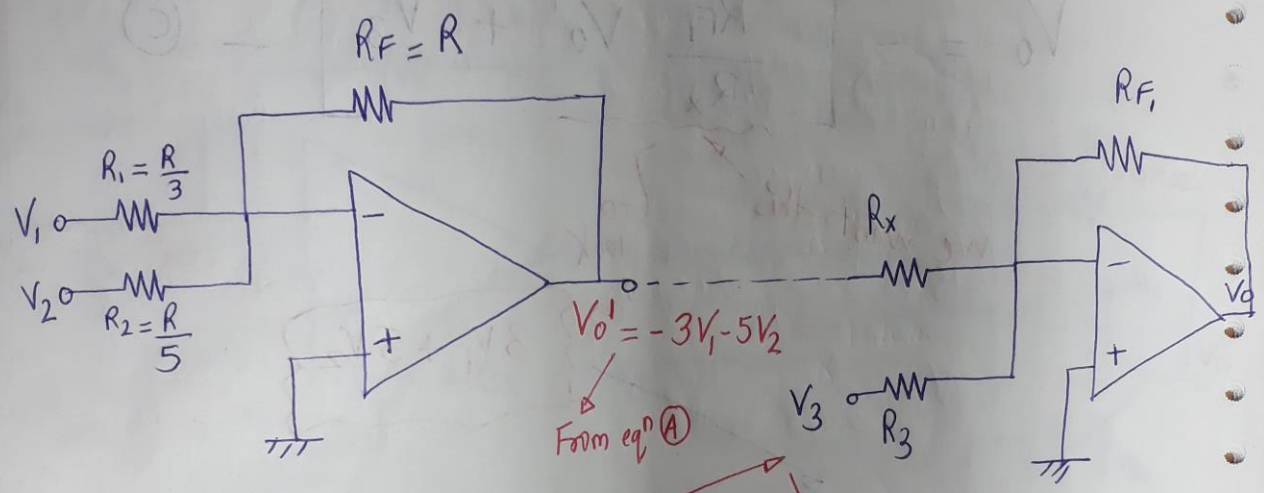

Now think !!!

What should be the value of R_x & R_3 & R_{F_1}

We want 3rd I/P as just V_3

So, if we make $R_{F_1} = R$

$\therefore$ $\boxed{R_3 \approx R}$ --- OH, that's wonderful

ie $V_0 = -\left[\frac{R_{F_1}}{R_x} V_0' + \frac{R_{F_1}}{R_3} V_3\right]$ — (B)

This became 1 now

INDERJIT SINGH

We are almost there,

Rewriting eq^n (B),

$-3V_1 - 5V_2$

$$V_0 = -\left[\frac{R_{F_1}}{R_x} V_0' + V_3\right] \quad \text{— (C)}$$

We want this to look as $3V_1 + 5V_2$

For this to happen, we have to make $\frac{R_{F_1}}{R_x} \approx 1$

So, let's do that,

if suppose $R_{F_1} = R$ and $R_x = R$

Then, eq^n (C) becomes,

$$V_0 = -\left[V_0' + V_3\right]$$

$$V_0 = -\left[-3V_1 - 5V_2 + V_3\right] = 3V_1 + 5V_2 - V_3$$

This is the GOAL!!

we have achieved it

Now, since we have achieved our GOAL ie $V_0 = 3V_1 + 5V_2 - V_3$, let's realize it using opamp. Let' say $R = 15K\Omega$,

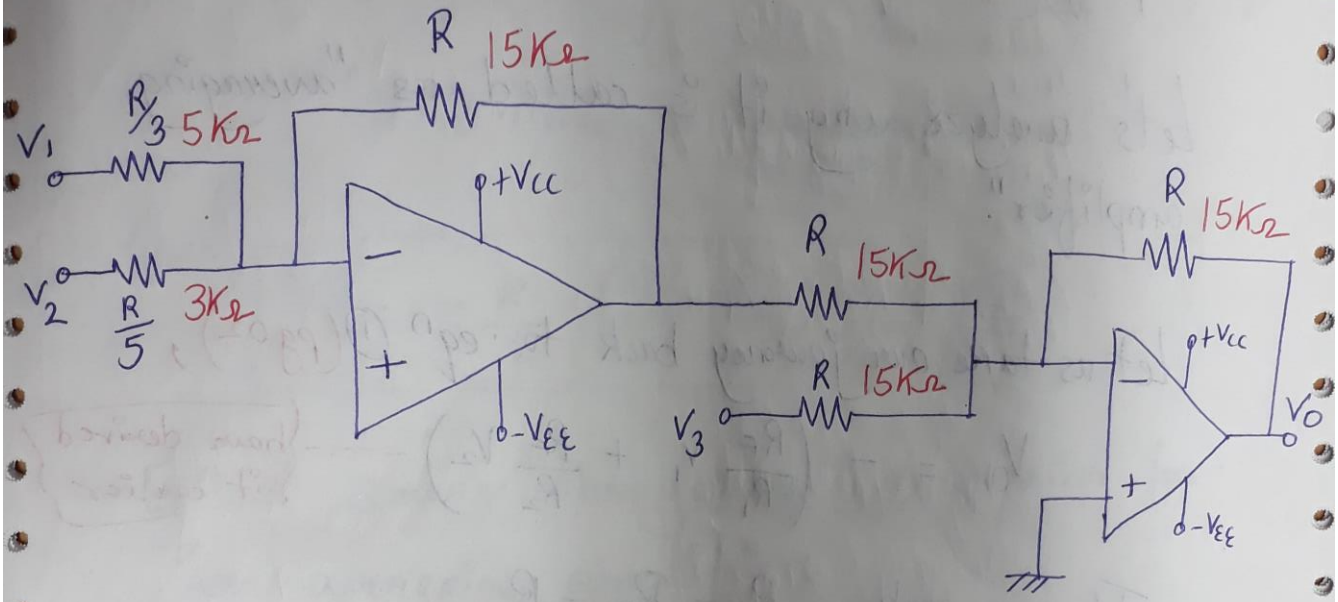

Solution was intruging (interesting), Isn't it!

So, let's continue learning "Fun with Opamps"

INDERJIT SINGH

Inverting adder has many variations in names, it can behave as Scaling amplifier, Summing amplifier and as "Averaging amplifier."

Let's analyze why it is called as "averaging amplifier".

Let us take our journey back to eq^n ① (pg 02),

$$V_0 = -\left(\frac{R_F}{R_1} V_1 + \frac{R_F}{R_2} V_2\right)$$ ---- {have derive it earlier}

If we make $R_1 = R_2 = R$

then $V_0 = -\frac{R_F}{R}(V_1 + V_2)$

Case ①:- & if now $\frac{R_F}{R} = \frac{1}{n}$ (where 'n' is number of I/p's)

ie $$\boxed{V_0 = -\left(\frac{V_1 + V_2}{2}\right)} \quad - ⓐ$$

The above expression show's that the circuit also behaves as an "Averaging amplifier".

Case ②:- If $\frac{R_F}{R} = \frac{k}{n}$

where, k is the gain of averaging amplifier and n is the no of input's

then, $$\boxed{V_0 = -\frac{k}{2}(V_1 + V_2)} \quad - ⓑ$$

Eqn ⓑ show's the general expression for an averaging amplifier.

with 'n' I/P's, eqn ⓑ becomes,

$$\boxed{V_0 = -\frac{k}{n}(V_1 + V_2 + \text{-----} + V_n)} \rightarrow ⓒ$$

INDERJIT SINGH

• Non-inverting Adder / Summer :-

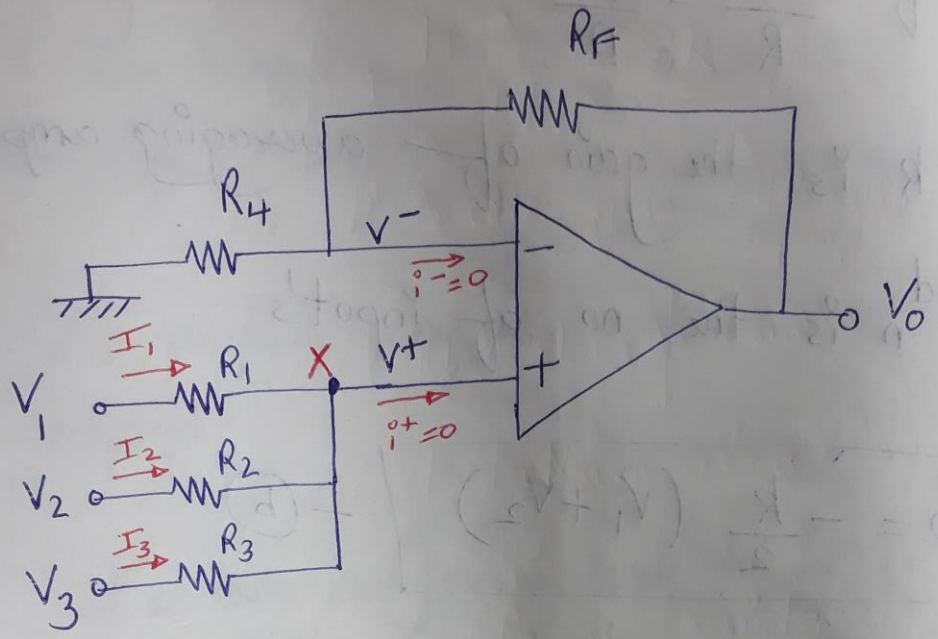

– Our investigation starts here ? (Find relation betn V_0 & I/P's)

Above circuit is a non-inverting ampl^r with V^+ as it's I/P,

$$\therefore \quad V_0 = \left(1 + \frac{R_F}{R_4}\right) V^+ \quad \text{—— (1)}$$

(Known result from non-inverting ampl^r case)

INDERJIT SINGH

Applying KCL at node X, we get

$$I_1 + I_2 + I_3 = i^+$$

But $i^+ \approx 0$ ($\because$ I/P impedance of Opamp is very high)

ie From circuit, we can write

$$\frac{V_1 - V^+}{R_1} + \frac{V_2 - V^+}{R_2} + \frac{V_3 - V^+}{R_3} = 0$$

If we consider $R_1 = R_2 = R_3 = R$

then $V^+ = \dfrac{V_1 + V_2 + V_3}{3}$ — (2)

From (1) & (2), we can write

$$\boxed{V_0 = \left(1 + \frac{R_F}{R_4}\right)\left(\frac{V_1 + V_2 + V_3}{3}\right)} \quad \text{— (3)}$$

→ Thus ckt behaves as an "averaging amplr"

Case (1):- If $R_F = R$, $R_4 = \frac{R}{2}$

$$\boxed{V_0 = V_1 + V_2 + V_3}$$

---- Thus, it act as a non-inverting summer

INDERJIT SINGH

Case ②:-

If $1 + \frac{R_F}{R_4} = 3k$

where k is the gain of summing amp^{lr}

$$\boxed{V_0 = k\,(V_1 + V_2 + V_3)}$$

Thus, the circuit behaves as a "Summing amplifier"

Case ③:- If $R_1 \neq R_2 \neq R_3$ ie resistor is different for each I/P, then the circuit behaves as a "Scaling amplifier".

INDERJIT SINGH