Make-up LICD lecture 02 dated 29-08-2018

Topics Covered: Frequency response of opamp in open loop configuration and demonstration of the same in LT Spice, Frequency response of opamp in closed loop configuration and demonstration of the same in LT Spice

01

27/8/18

* Frequency Response of Opamp :

It tells how does the gain of an amplifier (opamp) responds to different frequencies.

It is a plot of Voltage gain (may be in dB) versus frequency

Let's build up on frequency response for an opamp (open-loop)

→ let's consider 741

→ let's get started :-

. Consider equivalent circuit of 741 opamp :-

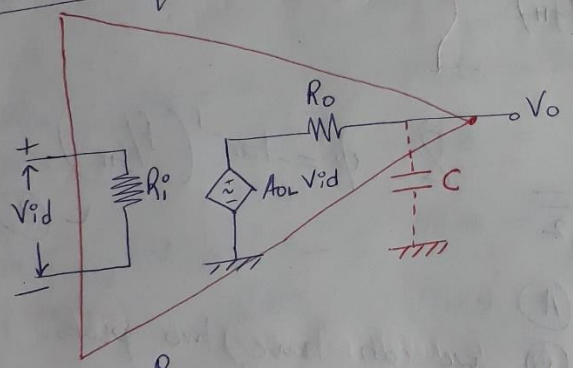

C – stray capacitance

A_{OL} – open-loop gain of opamp (2×10^5 for 741)

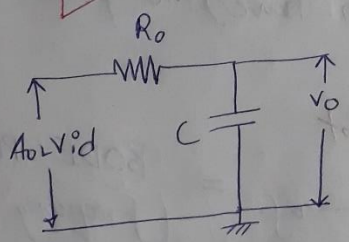

let's find out the transfer function of above ckt,

$$\frac{V_o}{V_{id}} = \frac{1/sC}{R_o + \frac{1}{sC}} A_{OL} = A \text{ (Gain with C considered)}$$

ie $A = \dfrac{A_{OL}}{1 + sCR_o}$

Put $s = j\omega = j2\pi f$

ie $A = \dfrac{A_{OL}}{1 + j(2\pi R_o C)f}$

let $f_H = \dfrac{1}{2\pi R_o C}$; f_H - higher cut-off frequency or 3dB frequency

$$\therefore \boxed{A = \frac{A_{OL}}{1 + j(f/f_H)}} \quad \text{— (1)}$$

$$\therefore |A| = \frac{A_{OL}}{\sqrt{1 + (f/f_H)^2}} \quad \text{— (A)} \qquad \& \quad \phi = -\tan^{-1}(f/f_H) \quad \text{— (B)}$$

From eqn (A) & (B), we can have two plots.

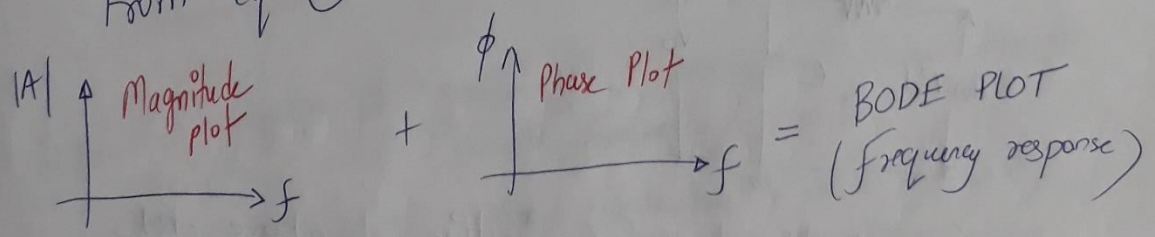

Let's focus on eq^n (A), {Magnitude Plot}

$$|A| = \frac{A_{OL}}{\sqrt{1+(f/f_H)^2}} \quad -(1)$$

$A_{OL} = 2\times10^5$ (741)

$$20\log|A| = 20\log A_{OL} - 20\log\sqrt{1+(f/f_H)^2}$$

ie $|A|_{dB} = 20\log A_{OL} - 20\log\sqrt{1+(f/f_H)^2}$

For $f=0$; $|A| = A_{OL}$; $|A|_{dB} = 20\log_{10}(A_{OL})$

$= 20\log_{10}(2\times10^5)$

$|A|_{dB} = 106\,dB$ (For 741)

For $f=f_H$; $|A| = \frac{A_{OL}}{\sqrt{2}}$; $|A|_{dB} = 20\log(A_{OL}) - 20\log\sqrt{2}$

say (5 Hz)

$= 106_{dB} - 3\,dB$

$|A|_{dB} = 103\,dB$ (For 741)

For $f=10f_H$; $|A| \approx \frac{A_{OL}}{\sqrt{100}}$; $|A|_{dB} = 20\log(2\times10^5) - 20\log\sqrt{100}$

(50Hz)

$|A|_{dB} = 86\,dB$ (For 741)

For $f=100f_H$; $|A| = \frac{A_{OL}}{\sqrt{10^4}}$; $|A|_{dB} = 20\log(2\times10^5) - 20\log\sqrt{10^4}$

(500Hz)

$|A|_{dB} = 66\,dB$ (For 741)

⋮

and so on.

For $f=10^6 f_H$; $|A| = \frac{A_{OL}}{\sqrt{(10^6)^2}}$; $|A|_{dB} = 106\,dB - 106\,dB$

$|A|_{dB} \approx 0\,dB$ (For 741)

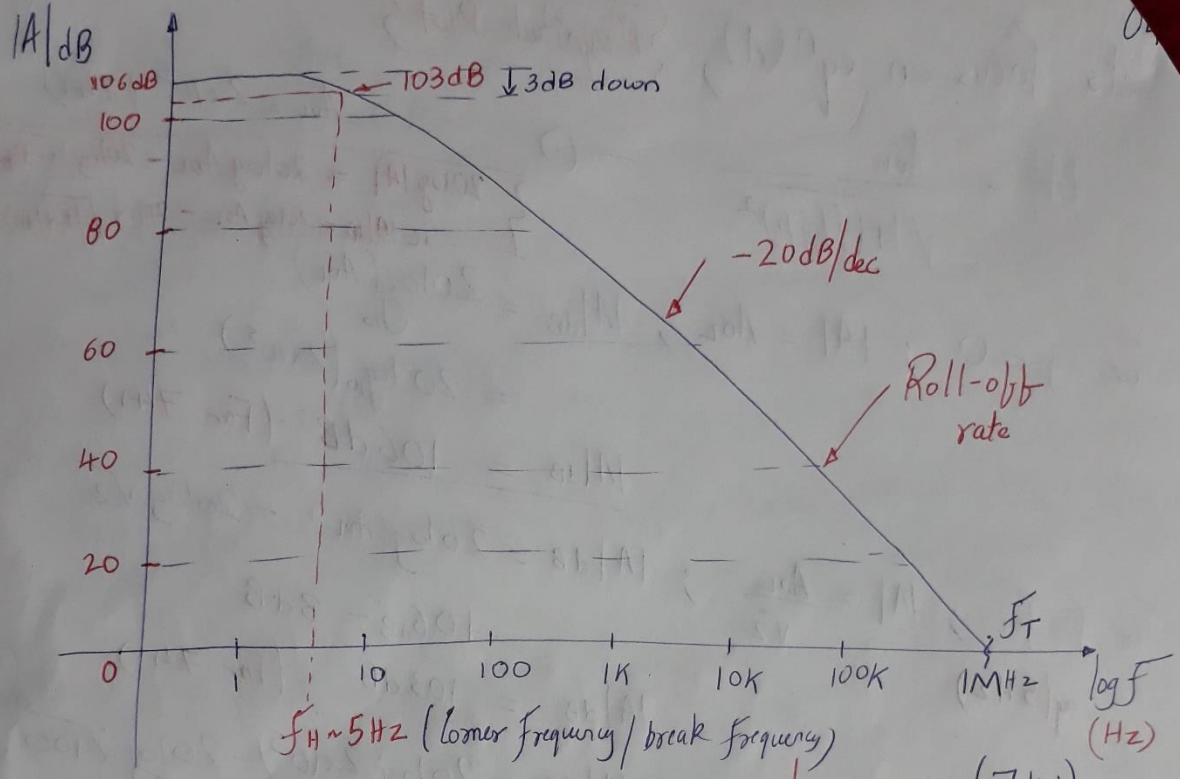

Open-loop frequency response of opamp (741)

Observations:-

1. At $f = f_H$, open loop gain of opamp falls down by 3dB. Hence f_H is known as "3 dB frequency". (OR f_0 → break frequency)
2. When frequency is increased by one decade ($10f_H$ to $100f_H$) the gain falls by 20dB (ie 86dB to 66dB).
   - It means that after f_H, gain starts falling with slope or "roll-off rate" of 20dB/decade.

3. At very low frequencies, the open loop gain of opamp is very high (~106dB) (or 2×10^5)
The gain is approximately constant from 0Hz (dc) to f_H (break frequency).

4. As the frequency ↑ses from f_H, gain ↓ses at the roll-off rate of 20dB/decade.

5. As the frequency is further ↑sed, at a particular frequency, open-loop gain of opamp is at 0dB or unity.
. This frequency (F_T) is known as unity gain-bandwidth of opamp. (or unit gain cross-over frequency).
. For 741 opamp, it is 1MHz (as specified in the data sheet of 741)

ie The product of gain & bandwidth at any point on the frequency response curve is 1MHz.

From the curve, we have :-

$$\boxed{\text{Gain} \times BW = 10^6}$$

$$2\times10^5 \times 5Hz = 10^6$$

$$10 \times 100KHz = 10^6$$

$$1 \times 1MHz = 10^6$$

↓ gain ↓ freq^n = product

Simulation was carried out in LT Spice and simulation results were discussed in class

Topics: Opamp OP-07 circuit in open loop configuration

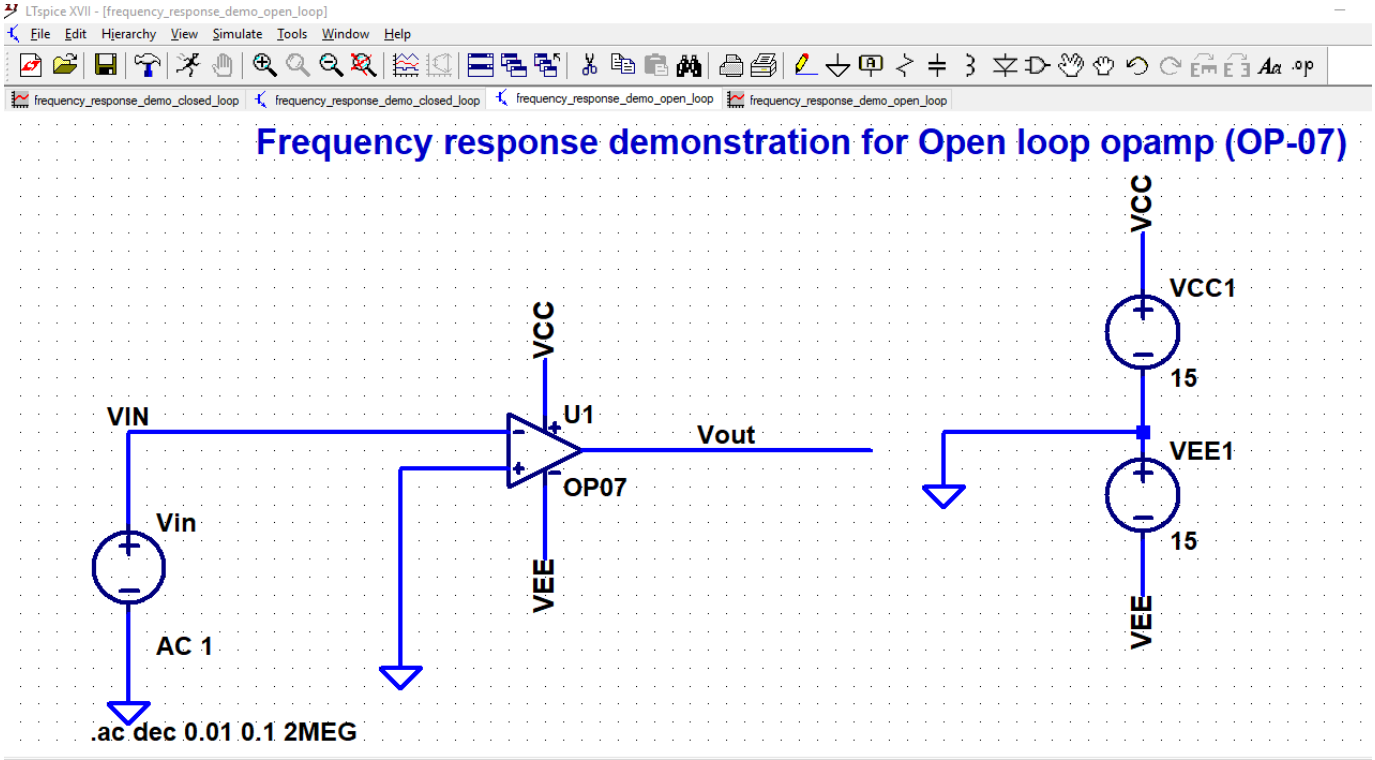

Open loop frequency response of Opamp OP-07

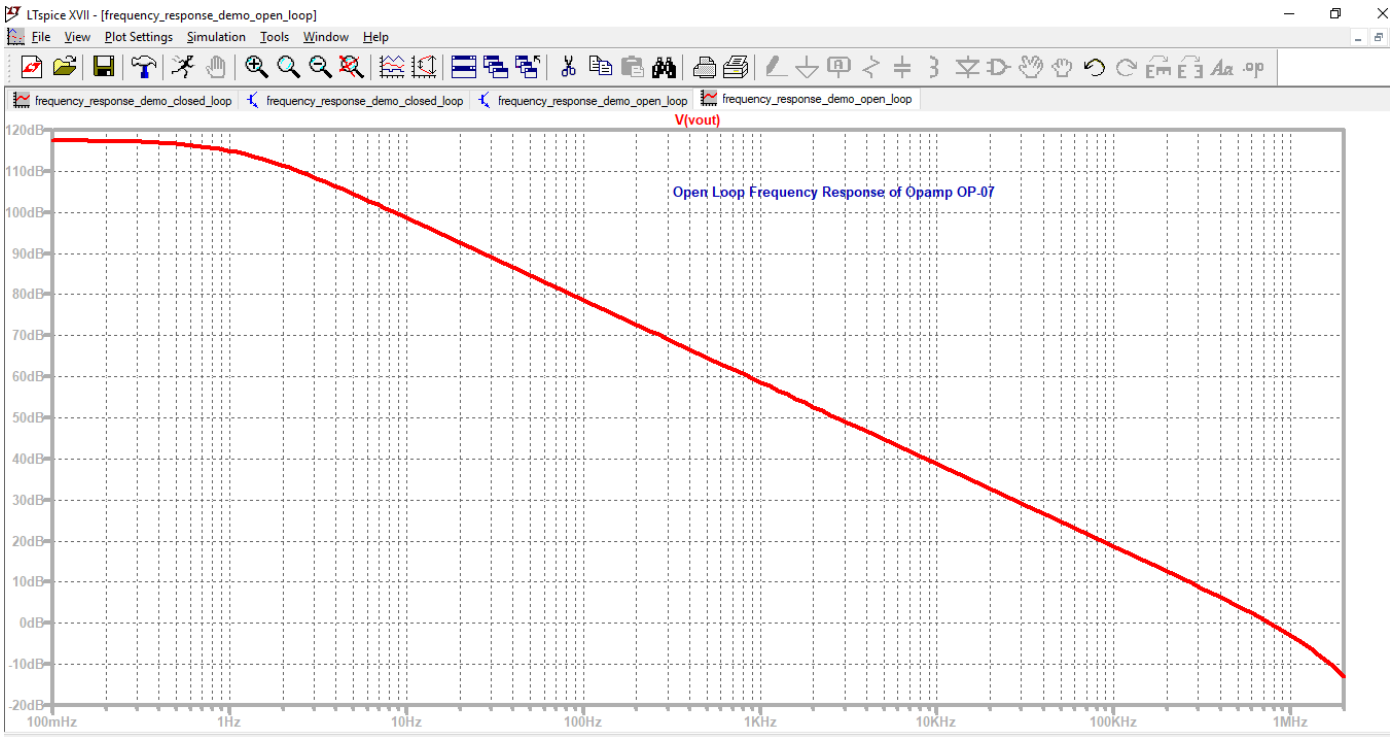

→ 741 opamp is internally compensated which contains a capacitance C_1 of 30pF, which reduces the open-loop gain at higher frequency at the roll-off rate of −20dB/dec. & thus assures a stable ckt.

→ Fairchild's μA 741, and National semiconductor's LM 741 are other internally compensated opamps.

Q. → Where are internally compensated opamp used?

- In the instrumentation circuit, the opamp required is to amplify relatively slow changing signals and therefore → it does not require good high-frequency response.

- In such & similar application's, internally compensated opamps can be used.

Note:- To implement gain eq^n ①, we must know the dc gain A_{OL} and break frequency (f_H) or (f_0).

However, on a typical opamp datasheet, value of unity gain-bandwidth (UGB) is given instead of value of f_0. ∴ f_0 can be found by using,

$$\boxed{f_0 = \frac{UGB}{A_{OL}}} \quad \text{---} *$$

Closed-loop Frequency response of opamp:

01
30/8/18

→ So far, we have discussed only open-loop-frequency response of opamp.

- Since, the opamp is generally used in a closed-loop configuration; → a study of closed-loop frequency is thus important topic to be investigated.

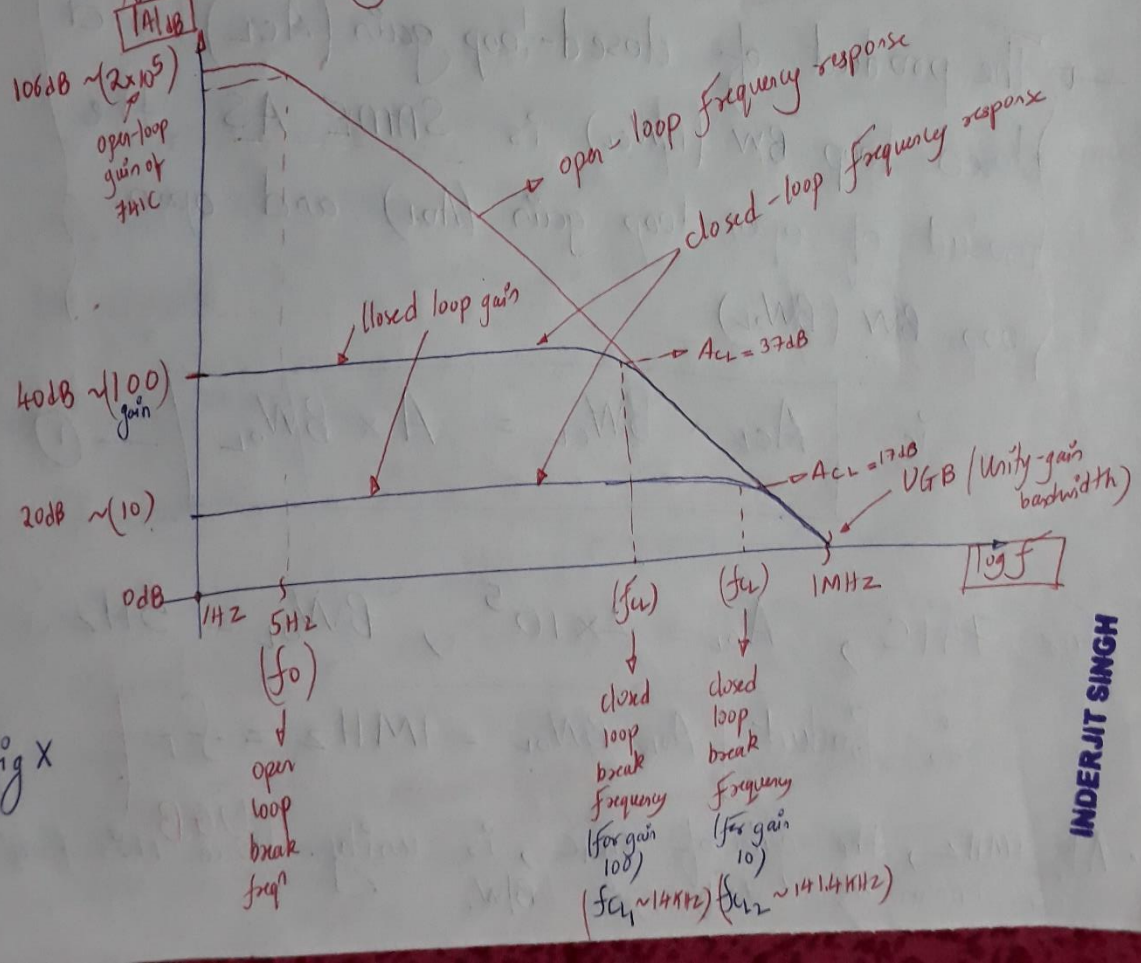

fig X

INDERJIT SINGH

- Bandwidth of opamp is → the range of frequencies over which the gain remains constant.

→ Bandwidth (BW) and gain (can be open-loop or closed-loop) are inversely proportional to each other.

→ With -ve feedback in opamp, we decrease the gain but at the same time bandwidth ↑ses.

→ The product of closed-loop gain (A_{CL}) and closed loop BW (BW_{CL}) is SAME AS the product of open-loop gain (A_{OL}) and open loop BW (BW_{OL})

ie $$\boxed{A_{CL} \times BW_{CL} = A \times BW_{OL}} \quad \text{— (1)}$$

For 741C, $A_{OL} = 2 \times 10^5$, $BW_{OL} = 5Hz$.

∴ Product $\boxed{A_{OL} \times BW_{OL} = 1MHz = f_T}$

- At 1MHz, the gain of 741C, is unity. Hence this freq^n is known as unity gain B/W. UGB

- We can easily assemble a circuit using opamp is give us a gain of 100 or 10

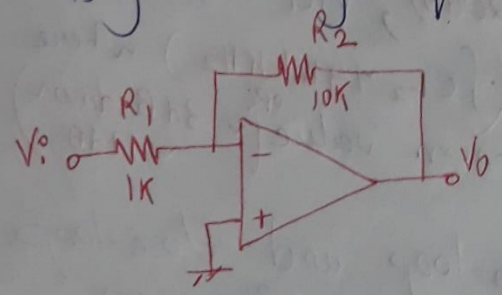

Gain = −10

We consider magnitude of gain; so don't worry about −ve sign

ie $\boxed{|A_{CL}| = 10}$

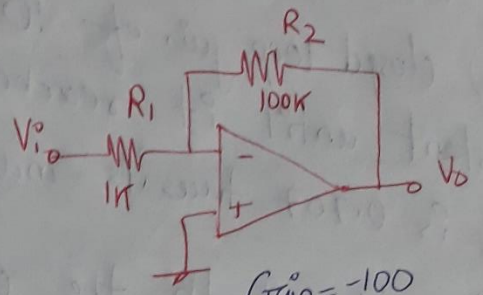

Gain = −100

ie $\boxed{|A_{CL}| = 100}$

- As per eq^n ①, no matter what the values of R_2 and R_1 are, the product of A_{CL} and BW_{CL} must be equal to f_T (1MHz for 741C).

→ Kindly refer fig X now :-

* Observations :- (From fig X) :-

1. If the resistors value (R_2 & R_1) are changed for (A_{CL}) closed loop gain of 100 (~40dB) ($20\log_{10}(100) \approx 40dB$), A_{CL} (~100) remains constant until it reaches f_{CL} (~14KHz) where A_{CL} is 0.707 of its max value (or 3dB down). There, after both open-loop (~37dB) and close-loop curve superimposes and uses to unity at $f = f_T$ (~1MHz)

INDERJIT SINGH

2. If the resistor values (R_2 & R_1) are changed for (A_{CL}) closed loop gain of 10 (~20dB), (A_{CL} ~10) remains constant until it reaches (f_{CL_2} ~141.4KHz) where A_{CL} is 0.707 times its maximum value (OR ~ 3dB down ~17dB)

- Thereafter both the open-loop and close-loop curve superimposes and uses to unity (~0dB) at f_T = 1MHz.

→ This happens because the gain × B/W product is constant, the closed-loop curve superimposes the open-loop curve beyond the break or cut-off frequency.

- One can see the above observation in fig X.

→ Open-loop gain	Closed loop gain	Closed loop gain
2×10^5	100	10
Frequency $(B/W)_{OL}$	Frequency $(B/W)_{CL}$	Freq^n $(B/W)_{CL}$
5Hz	14KHz	141.4KHz.

INDERJIT SINGH

Simulation was carried out in LT Spice and simulation results were discussed in class

Topics: Opamp OP-07 circuit in closed loop configuration

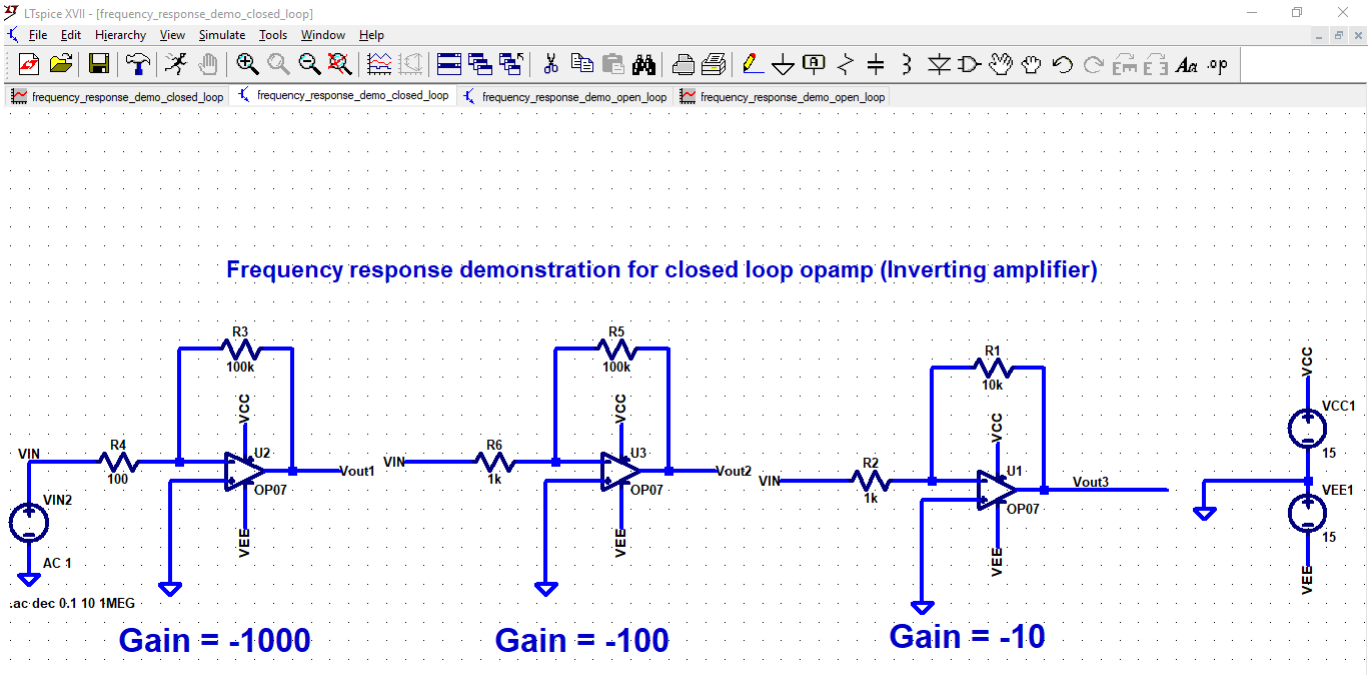
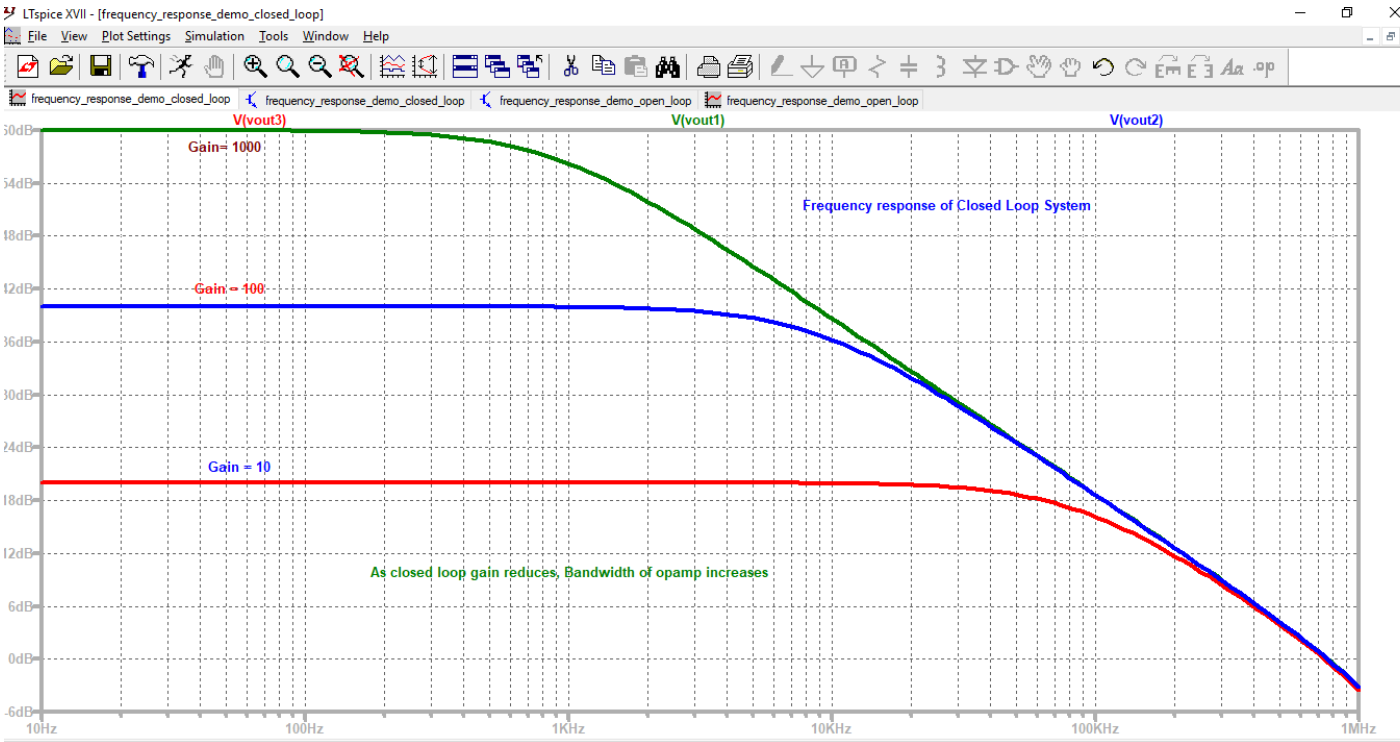
Closed loop frequency response of Opamp OP-07