K. J. Somaiya College of Engineering, Mumbai-77
(Autonomous College Affiliated to University of Mumbai)
Semester: January 2019 –May 2019

Max. Marks: 30 **Duration: 1hr.15 min.**
Class: SY **Semester: IV**
Branch: Electronics **Course Code: UECX402**
Course name: Electronic circuit analysis and design

Mid Term Test 1_solution

Q. No	Questions	Marks
Q.1	For the network shown below find mid frequency gain, and higher cutoff frequency of the amplifier. Rsignal =10KΩ, R_G = 1MΩ, R_D =4.7KΩ, Rs = 1KΩ, R_L= 2.2KΩ, I_{DSS} = 8mA, V_P =-4, rd =∞ , V_{DD} = 20v, I_{DQ} = 2mA. C_G = 0.01uf, C_C = 0.5uf, C_S = 2uf, Cgd = 2pf, Cds = 4pf, Cwi = 5pf, Cwo = 6pf. 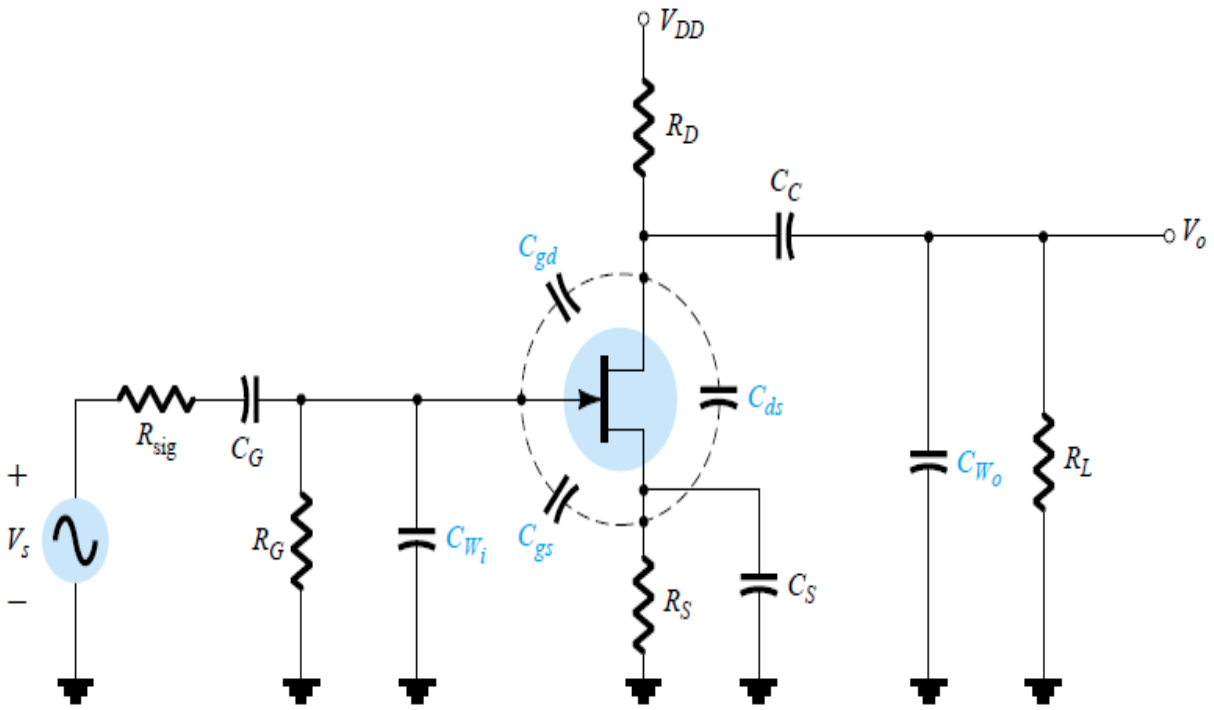 	**10**

Solution:

1. $A_{v_{mid}} = ?$ $\quad f_H = ?$ 27/2/19

01

$R_{sig} = 10K\Omega$, $R_G = 1M\Omega$, $R_D = 4.7K\Omega$, $R_S = 1K\Omega$,

$R_L = 2.2K\Omega$, $I_{DSS} = 8mA$, $V_P = -4V$, $V_{DD} = 20V$

$I_{DQ} = 2mA$, $C_G = C_{C_1} = 0.01\mu F$, $C_{C_2} = C_C = 0.5\mu F$

$C_S = 2\mu F$, $C_{gd} = 2pf$, $C_{ds} = 4pf$, $C_{wi} = 5pf$, $C_{wo} = 6pf$.

Sol^n:- $I_{DQ} = I_{DSS}\left(1 - \frac{V_{GSQ}}{V_P}\right)^2 \Rightarrow \sqrt{\frac{I_{DQ}}{I_{DSS}}} = \left(1 - \frac{V_{GSQ}}{V_P}\right)$

$\Rightarrow \frac{V_{GSQ}}{V_P} = 1 - \sqrt{\frac{I_{DQ}}{I_{DSS}}} \Rightarrow V_{GSQ} = V_P\left[1 - \sqrt{\frac{I_{DQ}}{I_{DSS}}}\right]$

- $V_{GSQ} = -4 \times \left(1 - \sqrt{\frac{2mA}{8mA}}\right) = \underline{-2V}$

- $g_m = \frac{2I_{DSS}}{|V_P|}\left(1 - \frac{V_{GSQ}}{V_P}\right) = \frac{2 \times 8mA}{4}\left(1 - \frac{(-2)}{(-4)}\right)$

$g_m \simeq 2m\frac{A}{V}$ (1m)

- Mid-frequency equivalent circuit

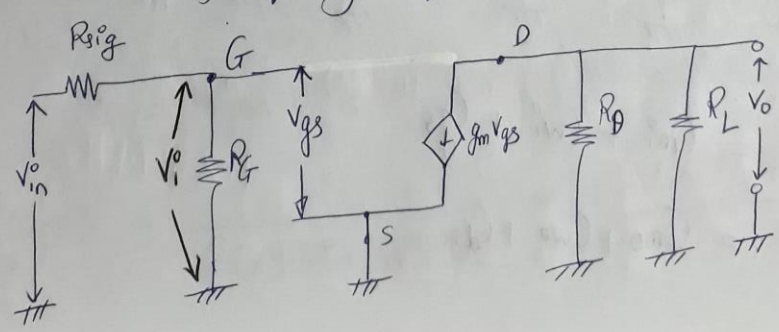

$$A_{v_{mid}} = \frac{V_o}{V_i} = \frac{-g_m V_{gs} (R_D \| R_L)}{V_{gs}}$$

$$= -g_m (R_D \| R_L)$$

$$= -2\times10^{-3} (4.7K \| 2.2K) = -2\times10^{-3} \times 1.4985K$$

$$\underline{A_{v_{mid}} = -2.994} \quad (1m)$$

$$A_{v_{mid}} \text{ with } R_{signal} = \frac{V_o}{V_{sin}} = \underbrace{\frac{V_o}{V_i}}_{A_{v_{mid}}} \frac{V_i}{V_{in}} \qquad \frac{V_i}{V_{in}} = \frac{R_G}{R_G + R_{signal}} = \frac{1M}{1M+10k} \approx 0.99$$

ie $A_{v_{mid}}$ with $R_{signal} = -2.994 \times 0.99 = \underline{-2.964}$

→ <u>High-frequency equivalent circuit:-</u>

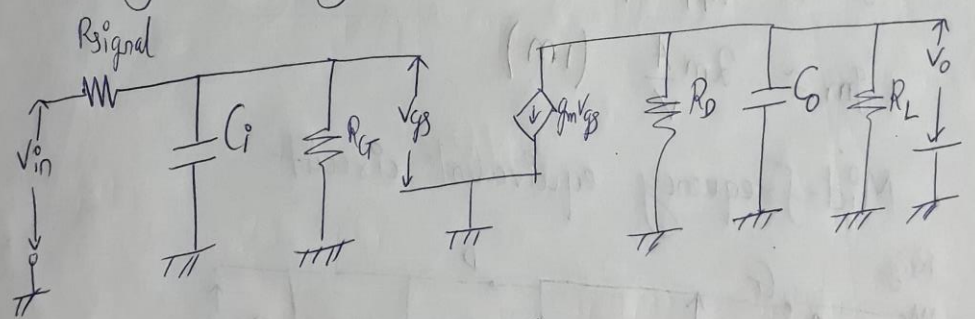

(1m)

$$C_i = C_{mi} + C_{wi} + C_{gs}$$

$$C_o = C_{mo} + C_{wo} + C_{ds}$$

- $C_{mi} = (1 - A_{vmid})\, C_{gd} = [1 - (-2.994)]\, 2pF$

$C_{mi} = 7.988\, pF$

- $C_i = C_{mi} + C_{wi} + \underbrace{C_{gs}}_{0 \text{ (Not given)}}$

$= 7.988pf + 5pf$

$\underline{C_i = 12.988\, pf}$ (1m)

- $C_o = C_{mo} + C_{wo} + C_{ds}$

- $C_{mo} = \left(1 - \frac{1}{A_{vmid}}\right) C_{gd} = \left(1 + \frac{1}{2.994}\right) \times 2pf$

$\underline{C_{mo} = 2.668\, pf}$

- $C_o = 2.668_{pf} + 6pf + 4pf = 12.668pf$ (1m)

$\rightarrow f_{Hi} = \frac{1}{2\pi R_{eq} C_i}$

$R_{eq} = R_{signal} \parallel R_G = 10K \parallel (1M) = 9.9K\Omega$

$f_{Hi} = \frac{1}{2\pi \times 9.9K \times 12.988pf} = \underline{1.23\ MHz}$ (2m)

$$f_{Ho} = \frac{1}{2\pi R_{eq} C_o}$$

$$R_{eq} = R_o \parallel R_L = 4.7K\Omega \parallel 2.2K\Omega \simeq 1.498K\Omega$$

$$\rightarrow f_{Ho} = \frac{1}{2\pi \times 1.498K \times 12.668pF} \simeq 8.3868$$

$$\underline{f_{Ho} = 8.3868\ MHz}$$ (2m)

Since, f_{Hi} is the lowest among f_{Hi} & f_{Ho}, the higher cut-off frequency of the amplifier is

$$\underline{f_H = 1.23\ MHz}$$ (1m)

OR

For the network shown below find mid frequency gain, and lower cutoff frequency of the amplifier.

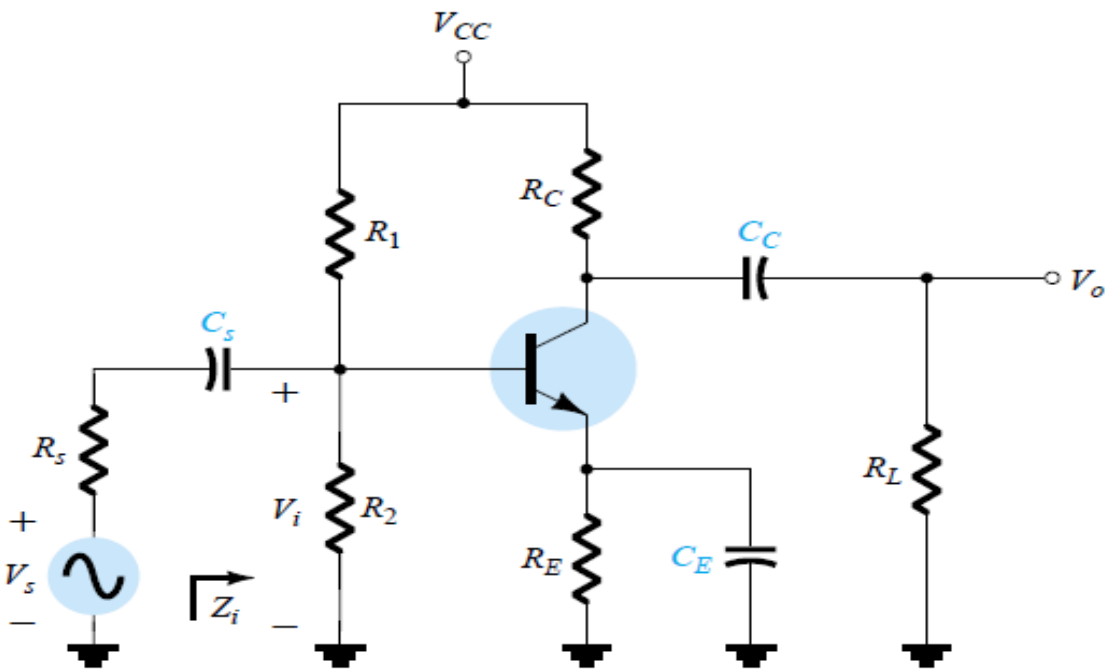

C_s = 10 μF,
C_E = 20 μF,
C_C =1 μF
R_s = 1 kΩ,
R_1=40 kΩ,
R_2 = 10 kΩ,
R_E = 2 kΩ,
R_C =4 kΩ,
R_L =2.2 kΩ β= 100,
r_o =∞, V_{CC} = 20 V

Solution:

OR

Q1. $C_S \approx C_{C_1} = 10\mu F$, $C_E = 20\mu F$, $C_C \approx C_{C_2} \approx 1\mu F$, 01

$R_{sig} \approx R_S \approx 1K\Omega$, $R_1 = 40K\Omega$, $R_2 = 10K\Omega$, $R_E \approx 2K\Omega$, $R_C \approx 4K\Omega$

$R_L = 2.2K\Omega$, $\beta = 100$, $r_o = \infty$, $V_{CC} = 20V$.

Sol^n:- $A_{vmid} = ?$, $f_L = ?$

a) DC Analysis:-

$$V_{th} = \frac{R_2}{R_1+R_2} \times V_{CC} = 4V \quad (1m)$$

$$R_{th} = R_1 \| R_2 = 40K \| 10K = 8K\Omega \quad (1m)$$

$$I_{BQ} = \frac{V_{th} - V_{BE}}{R_{th} + (1+\beta)R_E} = \frac{4-0.7}{8K + 101 \times 2K} = 15.71\mu A$$

$$I_{CQ} = \beta I_{BQ} = 1.571\ mA$$

b) Small-slg parameters:-

$$r_\pi = \frac{\beta V_T}{I_{CQ}} = \frac{100 \times 26mV}{1.571mA} = 1.655K\Omega \quad (1m)$$

$$g_m = \frac{I_{CQ}}{V_T} = 60.42\frac{mA}{V} \quad (1m)$$

c) Mid-frequency equivalent ckt:-

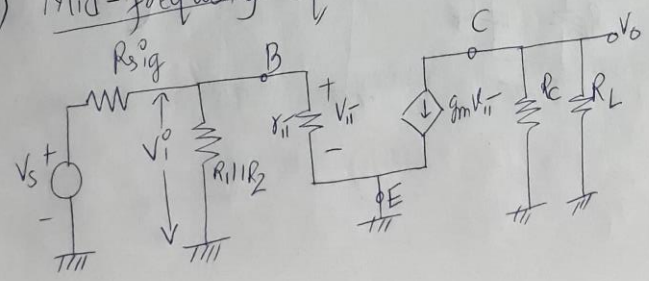

$$A_{v_{mid}} = \frac{V_o}{V_i} = \frac{-g_m V_\pi (R_C \| R_L)}{V_\pi}$$

$$= -g_m (R_C \| R_L) = -60.42\times10^{-3} (4K \| 2.2K)$$

$$= -60.42\times10^{-3} \times 1.42K$$

$$A_{v_{mid}} = -85.75 \quad (1m)$$

- $A_{v_{mid}}$ with R_{sig} $= \frac{V_o}{V_s} = \frac{V_o}{V_i} \times \frac{V_i}{V_s}$

$$\frac{V_i}{V_s} = \frac{R_1 \| R_2 \| r_\pi}{R_1 \| R_2 \| r_\pi + R_{sig}} = \frac{8K \| (1.655K)}{8K \| (1.655K) + 1K} = 0.578$$

$$A_{v_{mid}} \text{ with } R_{sig} = -85.75 \times 0.578$$

$$= -49.56$$

d) Low-frequency equivalent circuit:-

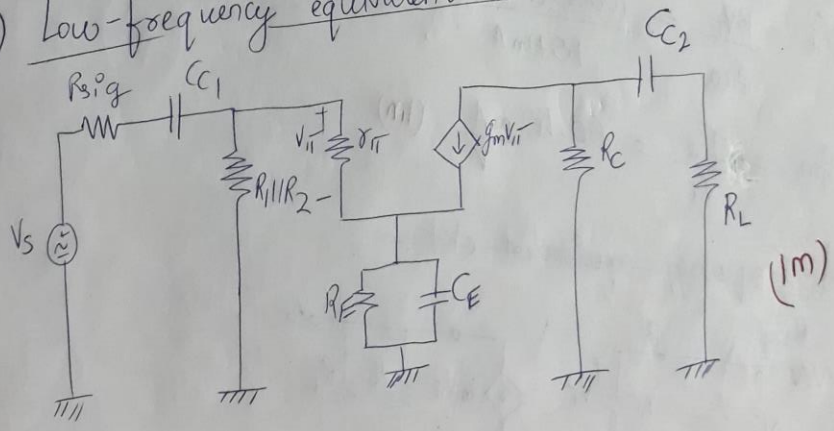

(1m)

- $f_{LC_1} = \dfrac{1}{2\pi C_1 \cdot R_{eq}}$

$R_{eq} = R_{sig} + R_i$; $R_i = R_1 \| R_2 \| r_\pi$

$= 40K \| 10K \| (1.655K)$

$R_{eq} = 1K + 1.37K$

$= 2.37K$

$R_i = 8K \| 1.655K = 1.37K$

$f_{LC_1} = \dfrac{1}{2\pi (2.37K)\, 10\mu F} = \underline{6.71\ Hz}$ (1m)

- $f_{LC_2} = \dfrac{1}{2\pi (R_C + R_L) C_2} = \dfrac{1}{2\pi (4K + 2.2K)\, 1\mu F} = \underline{25.67 Hz}$ (1m)

- $f_{LCE} = \dfrac{1}{2\pi R_{eq} C_E}$; $R_{eq} = R_E \| \left(\dfrac{R_{sig} \| \overbrace{R_1 \| R_2}^{8K} + r_\pi}{\beta} \right)$

$= 2K \| \left(\dfrac{888.88 + 1.655K}{100} \right)$

$= 2K \| 25.438$

$R_{eq} = 25.118\,\Omega$

- $f_{LCE} = \dfrac{1}{2\pi (25.118) \times 20\mu F}$

$= 316.81 Hz$ (1m)

→ $f_{LCE} = 316.81 Hz$ is the largest among f_{LC_1} & f_{LC_2}

∴ lower-cut off frequency of the amplifier is

$\underline{f_L = 316.81\ Hz}$ (1m)

Q2	For the network shown below Determine: V_{B1}, I_{C1}, Av, Zin, Zo	**10**

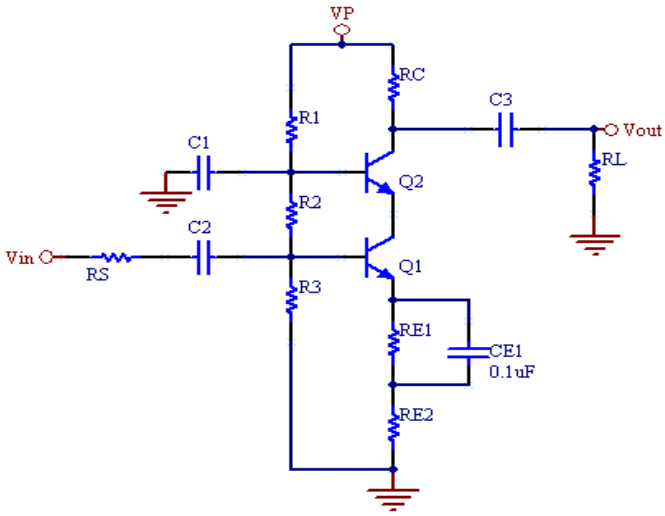

R1= 18KΩ, R2= 4KΩ,
R3 = 8KΩ, Rc= 2KΩ,
RE1 = 1KΩ,RE2= 1KΩ,
VP= 24v,
$\beta_1 = \beta_2 = 100$,
VBE=0.6v, Rs=50Ω,
RL= 2.2K,

Solution:

Q2. V_{B_1}, I_{C_1}, A_v, Z_{in}, Z_o ?

$R_1 = 18K\Omega$, $R_2 = 4K\Omega$, $R_3 = 8K\Omega$, $R_c = 2K\Omega$, $R_{E_1} = 1K\Omega$, $R_{E_2} = 1K\Omega$
$V_P = 24V$, $\beta_1 = \beta_2 = 100$, $V_{BE} = 0.6V$, $R_s = 50\Omega$, $R_L = 2.2K\Omega$

Sol^n:- a) DC Analysis:-

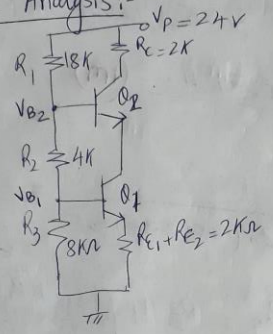

$\cdot\ V_{B_1} = \frac{R_3}{R_1+R_2+R_3} \times V_P$

$\rightarrow V_{B_1} = \frac{8K}{18K+4K+8K} \times 24 = 6.4V$ (2m)

$\cdot\ V_{B_2} = \frac{R_3+R_2}{R_1+R_2+R_3} \times V_P$

$\rightarrow V_{B_2} = \frac{4K+8K}{18K+4K+8K} \times 24 = 9.6V$

$\rightarrow V_{E_1} = V_{B_1} - V_{BE_1} = 6.4 - 0.6 = 5.8V$

$\rightarrow V_{E_1} = I_{E_1} R_E \rightarrow I_{E_1} = \frac{V_{E1}}{R_E} = \frac{5.8}{2K} = 2.9\ mA$

$\rightarrow I_{E_1} = I_{E_2} = I_{C_1} = I_{C_2} = 2.9mA$ (2m)

b) Small-slg parameters:-

$r_\pi = r_{\pi_1} = r_{\pi 2} = \frac{\beta V_T}{I_{CQ}} = \frac{100 \times 26mV}{2.9mA} = 896.55\ \Omega$

$g_m = g_{m_1} = g_{m_2} = \frac{I_{CQ}}{V_T} = 111.538\ \frac{mA}{V}$

c) Mid-Frequency AC equivalent circuit :-

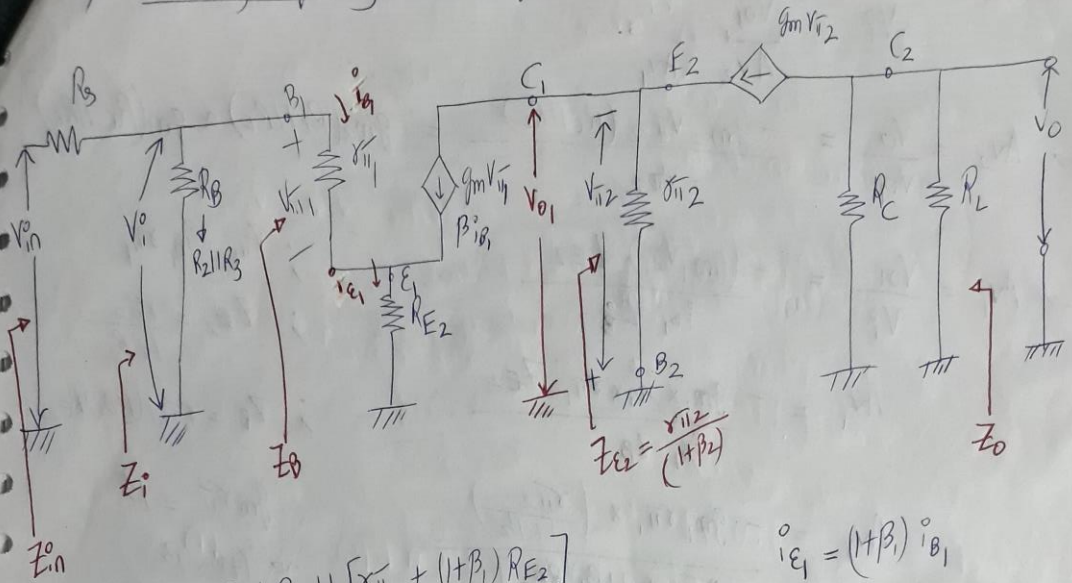

$i_{E_1} = (1+\beta_1)\, i_{B_1}$

$\rightarrow Z_i = R_2 \| R_3 \| [r_{\pi 1} + (1+\beta_1) R_{E_2}]$

$= 4K \| 8K \| [896.55 + 101 \times 1K\Omega]$

$= 2.667 K\Omega \| [101.896 K]$

$= \underline{2.598 K\Omega}$ (2m)

$\rightarrow Z_{in} = R_S + Z_i = 50 + 2.598 K\Omega = \underline{2.649 K\Omega}$

$\rightarrow Z_o = R_C \| R_L$

$= 2K \| 2.2K\Omega$

$= \underline{1.047 K\Omega}$ 2m

$\rightarrow Z_B = r_{\pi 1} + (1+\beta_1) R_{E_2}$

$$A_{v_{mid}} = \frac{V_o}{V_i} = \underbrace{\frac{V_o}{V_{o1}}}_{A_{v_2}} \times \underbrace{\frac{V_{o1}}{V_i}}_{A_{v_1}}$$

$$\rightarrow A_{v_2} = \frac{V_o}{V_{o1}} = \frac{-g_{m_2} V_{\pi 2} (R_C \| R_L)}{-V_{\pi 2}} = g_{m_2}(R_C \| R_L) \simeq g_m (R_C \| R_L)$$

$$\rightarrow A_{v_1} = \frac{V_{o1}}{V_i} = \frac{-(g_{m_1} V_{\pi_1}) Z_{E2}}{i_{b_1} Z_B}$$

; $V_{\pi_1} = i_{b_1} r_{\pi_1}$

; $Z_{E_2} = \frac{r_{\pi 2}}{1+\beta_2}$

; $Z_B = r_{\pi_1} + (1+\beta_1) R_{E_2}$

$$A_{v_1} = \frac{-g_{m_1} \times \cancel{i_{b_1}} \times r_{\pi_1} \; Z_{E2}}{\cancel{i_{b_1}} \; Z_B}$$

$$A_{v_1} = \frac{-g_{m_1} r_{\pi_1} \times \left(\frac{r_{\pi 2}}{1+\beta_2}\right)}{\left[r_{\pi_1} + (1+\beta_1) R_{E_2}\right]}$$

$g_m r_\pi = \beta$

$\rightarrow 1+\beta \simeq \beta$

$\rightarrow r_{\pi_1} = r_{\pi 2} = r_\pi$

$\rightarrow \beta_1 = \beta_2 = \beta$

$$\approx \frac{-\beta_1 \times \left(\frac{r_{\pi 2}}{1+\beta_2}\right)}{r_{\pi_1} + (1+\beta_1) R_{E_2}}$$

$$\approx \frac{-\cancel{\beta} \times \frac{r_{\pi 2}}{1+\cancel{\beta}}}{r_{\pi_1} + (1+\beta) R_{E_2}} \approx -\frac{r_\pi}{r_\pi + (1+\beta) R_{E_2}}$$

$$\left(\frac{r_\pi}{1+\beta} \approx \frac{r_\pi}{\beta} \simeq \frac{1}{g_m}\right)$$

$$\approx -\frac{\left(r_\pi / 1+\beta\right)}{\left(\frac{r_\pi}{1+\beta}\right) + R_{E_2}}$$

$$\approx -\frac{1/g_m}{\frac{1}{g_m} + R_{E_2}}$$

$$\boxed{A_{v_1} \approx -\frac{1}{1+g_m R_{E_2}}}$$

$$A_{v_{mid}} = A_{v_1} A_{v_2}$$

07

$$= -\left(\frac{1}{1+g_m R_{E2}}\right) \times g_m (R_C \| R_L)$$

$$\approx -\frac{g_m (R_C \| R_L)}{1+g_m R_{E2}}$$

$$\approx \frac{-111.538\times10^{-3} \times \overbrace{(2K \| 2.2K)}^{1.047K\Omega}}{1+111.538\times10^{-3}\times 1K\Omega}$$

$$\approx -\frac{116.78}{112.538}$$

$$\boxed{A_{v_{mid}} \approx -1.037}$$ 2m

$$A_{v_{mid}} \text{ with } R_s = A_{v_{mid}} \times \frac{V_i}{V_{in}} = A_{v_{mid}} \times \frac{Z_i}{Z_i+R_s} \approx -1.037 \times \left(\frac{2.598K}{2.598K+50}\right)$$

$$\boxed{A_{v_{mid}} \text{ with } R_s = -1.017}$$

Q3 i) Define: Differential gain, Common mode gain and Common mode rejection ratio. **06**

Each definition ----------(2M)

Q3 i) a) Differential gain:- (A_d) 2m

The gain with which differential amplifier amplifies differential i/p signal (V_d) is known as "Differential gain".

$$A_d = \frac{V_{o_1}-V_{o_2}}{V_{in_1}-V_{in_2}} = \frac{\overbrace{V_{o_1}-V_{o_2}}^{\text{Differential o/p voltage}}}{V_d}$$

→ Ideally, $A_d \to \infty$, practically A_d should be very large.

b) Common mode gain:- (A_{cm}) 2m

- The gain with which a differential amplifier amplifies common-mode signal is known as "Common-mode gain".

$$A_{cm} = \frac{V_{o1} - V_{o2}}{V_{cm}} \quad \text{where } V_{cm} = \frac{V_{in1} + V_{in2}}{2}$$

- Ideally $A_{cm} \to 0$, practically it should be very small.

c) Common mode rejection ratio :- (CMRR) 2m

- CMRR is a parameter which decides the ability of differential amplifier to reject common-mode signal & amplify differential mode signal.

- Mathematically, $CMRR = \left|\frac{A_d}{A_{cm}}\right|$

$$CMRR_{dB} = 20\log_{10}\left|\frac{A_d}{A_{cm}}\right|$$

- Ideally $CMRR \to \infty$, practically it should be very large.

ii)	Compare CE-CE and CS-CE cascade amplifier on the basis of: 1.Voltage gain(higher in CE-CE) 2. Input impedance (Higher in CS-CE) 3. Bandwidth (Higher in CS-CE) 4. Output impedance (same) Each point ----------(1M)	**04**

Q3 ii) 09

	CE-CE cascade amplifier	CS-CE cascade amplifier	
1. Voltage gain	Higher	Lower than CE-CE	1m
2. I/p impedance	Lower than CS-CE	Higher	1m
3. Bandwidth	Lower than CS-CE	Higher	1m
4. O/p impedance.	Same	Same.	1m